Abbott
PAIN MANAGEMENT PROVIDER®

and

APM™ II

Technical Service Manual

For use with the following list numbers:

13960 - All Codes
13965 - All Codes

5525

ABBOTT LABORATORIES
NORTH CHICAGO, IL 60064
USA

430-85656-003 (Rev. 8/96)

List of Changes

Part Number	Description of Change	Remove and Destroy Pages	Insert Change Pages
430-85656-001 (Rev. 2/94)	Original issue.	All	All
430-85656-002 (Rev. 6/94)	Second issue. Added PVT Data Form and winged back case in appropriate figures; added international screens for global use.	All	All
430-85656-003 (Rev. 8/96)	Third issue. Reformatted text and added APM II pump information.	All	All

This page intentionally left blank.

Table of Contents

List of Figures

This page intentionally left blank.

List of Tables

This page intentionally left blank.

Section 1
Introduction

1.1
Scope

This Technical Service Manual applies to the Abbott Pain Management Provider® (APM™) and Abbott Pain Manager II (APM™ II) only. It is organized into the following nine sections:

- ❑ Section 1 Introduction
- ❑ Section 2 Warranty
- ❑ Section 3 System Operating Manual
- ❑ Section 4 Theory of Operation
- ❑ Section 5 Maintenance and Service Tests
- ❑ Section 6 Troubleshooting
- ❑ Section 7 Replaceable Parts and Repairs
- ❑ Section 8 Specifications
- ❑ Section 9 Drawings

Note: In this manual, the terms "pump" and "pumps" refer to all configurations of both the APM and APM II unless otherwise specified.

Note: Non-English language keypad names and display text are not indicated in this manual.

Note: Figures are rendered as graphic representations to approximate the actual product; therefore, figures may not exactly reflect the product. Display screens and touchswitch labels may vary slightly, depending on the configuration of the pump in use.

If a problem in the infusion system operation cannot be resolved using the information in this manual, contact Abbott Laboratories Technical Support Operations (see *Section 6.1, Technical Assistance*).

1.2
APM and APM II Overview

The APM and APM II are single-channel infusion pumps designed to deliver analgesic drugs to patients in the hospital, in outpatient treatment centers, and at home. Primarily designed for pain management protocols, the pumps may also be used for other therapies that require infusion delivery schedules of continuous rates at or below 25 mL per hour. The pumps provide accurate, pulsatile administration of single-fluid regimens delivered via the following routes: epidural, intravenous, subcutaneous or arterial. A remote bolus switch allows for patient controlled analgesia (PCA).

Section 1
Introduction

1.1
Scope

This Technical Service Manual applies to the Abbott Pain Management Provider® (APM™) and Abbott Pain Manager II (APM™ II) only. It is organized into the following nine sections:

- ❑ Section 1 Introduction
- ❑ Section 2 Warranty
- ❑ Section 3 System Operating Manual
- ❑ Section 4 Theory of Operation
- ❑ Section 5 Maintenance and Service Tests
- ❑ Section 6 Troubleshooting
- ❑ Section 7 Replaceable Parts and Repairs
- ❑ Section 8 Specifications
- ❑ Section 9 Drawings

Note: In this manual, the terms "pump" and "pumps" refer to all configurations of both the APM and APM II unless otherwise specified.

Note: Non-English language keypad names and display text are not indicated in this manual.

Note: Figures are rendered as graphic representations to approximate the actual product; therefore, figures may not exactly reflect the product. Display screens and touchswitch labels may vary slightly, depending on the configuration of the pump in use.

If a problem in the infusion system operation cannot be resolved using the information in this manual, contact Abbott Laboratories Technical Support Operations (see *Section 6.1, Technical Assistance*).

1.2
APM and APM II Overview

The APM and APM II are single-channel infusion pumps designed to deliver analgesic drugs to patients in the hospital, in outpatient treatment centers, and at home. Primarily designed for pain management protocols, the pumps may also be used for other therapies that require infusion delivery schedules of continuous rates at or below 25 mL per hour. The pumps provide accurate, pulsatile administration of single-fluid regimens delivered via the following routes: epidural, intravenous, subcutaneous or arterial. A remote bolus switch allows for patient controlled analgesia (PCA).

Special safety features are integrated into the pump design, which include an over-pressure (occlusion) alarm, an air-in-line alarm, a motor watchdog circuit, motor parameter monitoring, and numerous backup failure detection modes to prevent single-point failures from endangering the patient.

The pump is microprocessor based and is programmed through a 24-key keypad on the front of the pump. The state of the pump is displayed using a 16-character-by-2-line alphanumeric LCD module. Dedicated cartridges are required to deliver fluids through rotary peristaltic pumping action. Power is supplied by two 9-V alkaline batteries (Duracell® MN1604 is recommended for best performance), a nickel-cadmium rechargeable battery pack, or an external AC power supply.

APM and APM II system kits contain a pump, a remote bolus switch, a wall plug-in AC power supply (110V or 220V), two 9-V alkaline batteries, and a *System Operating Manual*. Some international configurations contain a table top 220V AC power supply with a separate power cord.

1.2.1
Pump Operation

For specific instructions regarding pump operation, refer to the *APM System Operating Manual* or the *APM II System Operating Manual*.

The pump has several programming modes: Continuous, Bolus (PCA) only, or Continuous and Bolus (PCA). The continuous mode delivers fluid in small doses spaced evenly over time. Delivery rates and bolus dosage amounts are programmed in one of three units of measure: milliliters (mL), milligrams (mg), or micrograms (µg). A loading dose is programmable for immediate delivery or delayed delivery. Bolus doses can be programmed to begin delivery on demand.

The operator programs the pump by selecting the mode (epidural or PCA), volume delivery (mL) or mass delivery (mg or µg), concentration (only if mass delivery is selected), rate, loading dose (if desired), and total amount to be delivered. If mass delivery is selected, the pump automatically converts mgs or µgs to the closest number of tenths-of-mL. The amount of fluid delivered is shown on the display. When a bolus is programmed, a minimum lockout time between boluses must also be programmed. In addition to the lockout time, the operator can also program the maximum total volume that can be delivered in a selected period.

The pump contains a time-of-day clock and event history storage capability. The program settings and significant events that take place while a protocol is running can be reviewed on the liquid crystal display (LCD), along with time and date of occurrence. A printer jack allows printout of this history information when a pump is connected to a compatible printer. Two different special printer cables (depending on printer choice) are available from Abbott Laboratories as accessory items. With proper communication software, a pump's history can also be downloaded to a personal computer as an ASCII file.

1.2.2
APM and APM II Differences

The APM and APM II have the following significant hardware differences:

Table 1-1. APM and APM II Hardware Differences

Item	APM	APM II
"Winged" back case design that stabilizes the motor if the pump is dropped	This change has been implemented for APM pumps, but some earlier models may not have this feature. All replacement back case assemblies have this feature	All APM II pumps are manufactured with the "winged" back case design
Add-on PCB's (not interchangeable)	Surge suppresser board	Add-on board
External unit interface	None	External unit interface uses two previously unused pins in the printer port; a circuit was added to interface pins with the microprocessor. This interface is not currently used
Circuit protection against incorrect AC power supply usage	None	A transient voltage suppresser was added to prevent damage to the U35 comparator should an incorrect AC adapter be used

The APM and APM II have the following significant software differences:

Table 1-2. APM and APM II Software Differences

Item		APM	APM II
History Event Log	Scrolling	HISTORY key provides forward only scrolling	Arrow keys provide back and forth scrolling; HISTORY key provides forward scrolling
	Volume History	User can review entire history event log only	User can review entire history event log or shift and container volume information
	Bolus Counts	Delivered and demand counts logged to 2 places (max. 99)	Delivered and demand counts logged to 4 places (max. 9999)
	Program Totals Text (same data)	GRAND TO GO	VOLUME INFUSED VTBI (volume to be infused)

Table 1-2. APM and APM II Software Differences

	Item	APM	APM II
Programming	Numeric Entries	If entered value too large or too small, pump defaults to maximum or minimum value	If entered value too large or too small, pump defaults to zero
	Micrograms Range	0.1 to 9999.9 µg	1 to 999,999 µg (no decimal)
	Bolus Lockout Time	5 to 99	5 to 999 minutes
	Volume Limits	4-hour limit available	1-hour and 4-hour limits available; epidural mode defaults to 1-hour 25 mL limit
	Container Size	Pump requests "TOTAL AMOUNT" for container size entry	Pump requests "CONTAINER SIZE"
	Air Sensitivity	Defaults to HIGH setting unless keypad locked at different setting	Sensitivity setting selected during programming
Operational	Purging	2 minute maximum; purging available only after programming complete	4 minute maximum; purging available during programming before delivery of loading dose
	Loading Dose	If stopped, cannot be completed	Loading dose may be completed after an interruption
	Keypad Lock	Full lock only	Full lock or container lock, which allows user to reset program and clear shift amount
	Air-In-Line Alarm	Cleared by unlocking pump and pressing PURGE key	Cleared by pressing SILENCE then STOP, whether the pump is locked or not
	RESET Key Display (same functionality)	1. RESET SHIFT 2. RESET PROGRAM	1. NEW SHIFT TOTL 2. NEW CONTAINER
	CHANGE Key Functionality	Units of delivery can be changed through the CHANGE key function	Units of delivery CANNOT be changed without reprogramming

1.3 Conventions

The following conventions are used throughout this manual:

- Touchswitches are described in all caps and enclosed in brackets, e.g., "Press [1], [0], [0] and [ENTER] to select a 100 mL container size."
- Screen displays reference in the text are in all caps, e.g., "When resetting is complete two beeps sound and the INITIALIZE NVRAM OR USE ARROWS display returns."

Throughout this manual, warnings, cautions, and notes are used to emphasize important information as follows:

WARNING:

A warning contains special safety emphasis and must be observed at all times. Failure to observe a warning is potentially life threatening.

CAUTION: A caution contains information that could prevent irreversible equipment damage or failure.

Note: A note highlights information that helps explain a concept or a procedure.

This page intentionally left blank.

Section 2
Warranty

Subject to the terms and conditions herein, Abbott Laboratories, herein referred to as Abbott, warrants that the product shall conform to Abbott's standard specifications and be free from defects in material and workmanship under normal use and service for a period of one year after purchase. Abbott makes no other warranties, express or implied, as to merchantability, fitness for a particular purpose, or any other matter.

Purchaser's exclusive remedy shall be, at Abbott's option, the repair or replacement of the product. In no event shall Abbott's liability arising out of any cause whatsoever (whether such cause be based in contract, negligence, strict liability, tort, or otherwise) exceed the price of such product, and in no event shall Abbott be liable for incidental, consequential, or special damages or losses or for lost business, revenue, or profits. Warranty product returned to Abbott must be properly packaged.

The foregoing warranty shall be void in the event the product has been misused, damaged, altered, or used other than in accordance with product manuals so as, in Abbott's judgment, to affect its stability or reliability, or in the event the serial or lot number has been altered, defaced, or removed.

The foregoing warranty shall also be void in the event any person, including the Purchaser, performs or attempts to perform any major repair or other service on the product without having been trained by an authorized representative of Abbott and using Abbott documentation and approved spare parts. For purposes of the preceding sentence, "major repair or other service" means any repair or service other than the replacement of accessory items such as batteries.

In providing any parts for repair or service of the product, Abbott shall have no responsibility or liability for the actions or inactions of the person performing such repair or service, regardless of whether such person has been trained to perform such repair or service. It is understood and acknowledged that any person other than an Abbott representative performing repair or service is not an authorized agent of Abbott.

This page intentionally left blank.

Section 3

System Operating Manual

A System Operating Manual is included with every APM and APM II kit. Insert a copy in this binder's pockets for convenient reference. If a copy of the System Operating Manual is not available, contact Abbott Laboratories Technical Support Operations (see *Section 6.1, Technical Assistance*).

This page intentionally left blank.

Section 4
Theory of Operation

This section describes the theory of operation of the APM/APM II. The pump has a modular construction that consists of front and back case assemblies; a motor frame mounted with the latch, motor, and optics assemblies; and a printed circuit board (PCB) with mounted display module assembly (refer to *Figure 4-1. Assemblies*).

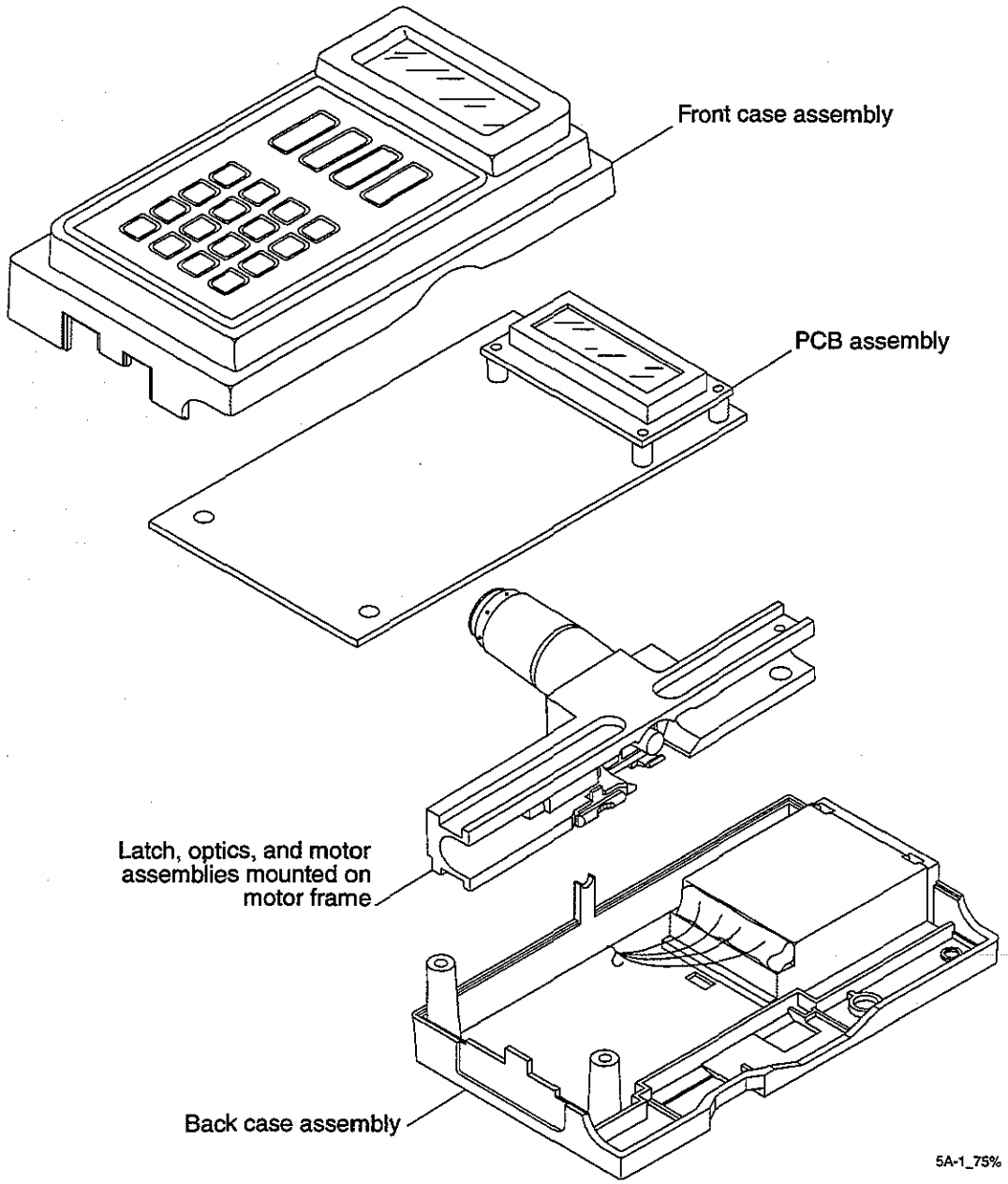

Figure 4-1. Assemblies

4.1
Front Case Assembly

The front case is made of plastic that contains a conductive material to provide enhanced ESD and EMI protection for the pump electronics. A clear plastic window protects the LCD mounted on the PCB. The keypad provides user interface with 24 membrane switches connected to the PCB by a ribbon cable threaded through a slot in the front case. Refer to the pump's *System Operating Manual* for descriptions of key functionality.

4.2
Back Case Assembly

The back case is made of the same ESD/EMI-protected plastic as the front case. The battery door is removable to allow access to the battery compartment. Battery terminals are constructed of spring clips that are insulated from the conductive case. Positive and negative contacts are identified. Batteries are installed in a diode-isolated parallel configuration. Wires housed in a crimp terminal connect the four battery contacts to the PCB.

4.3
Motor Frame

The motor frame aligns the cartridge to the drive motor and optical sensors, and completes the outer part of the pumping mechanism (refer to *Figure 4-2. Motor Frame*). The alignment of the cartridge is critical to the performance of the pump. Air-in-line and occlusion detection systems require correct cartridge alignment to function properly.

The location, height, and perpendicularity of the dowel pins determine the location of the cartridge within the motor frame. Dowel pin insertion into the motor frame is made by using specially designed equipment; for that reason, replacement of the motor frame must be performed by Abbott Laboratories.

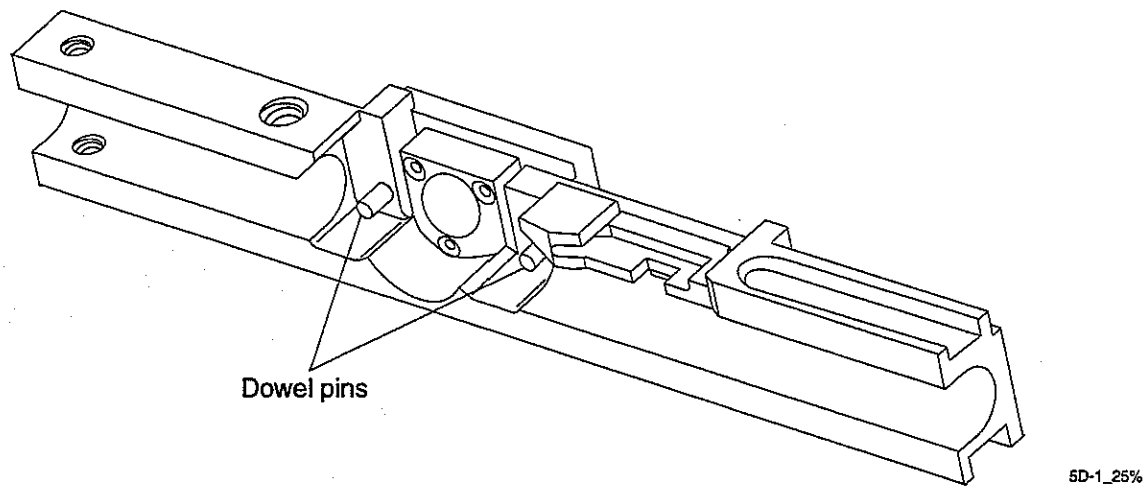

Figure 4-2. Motor Frame

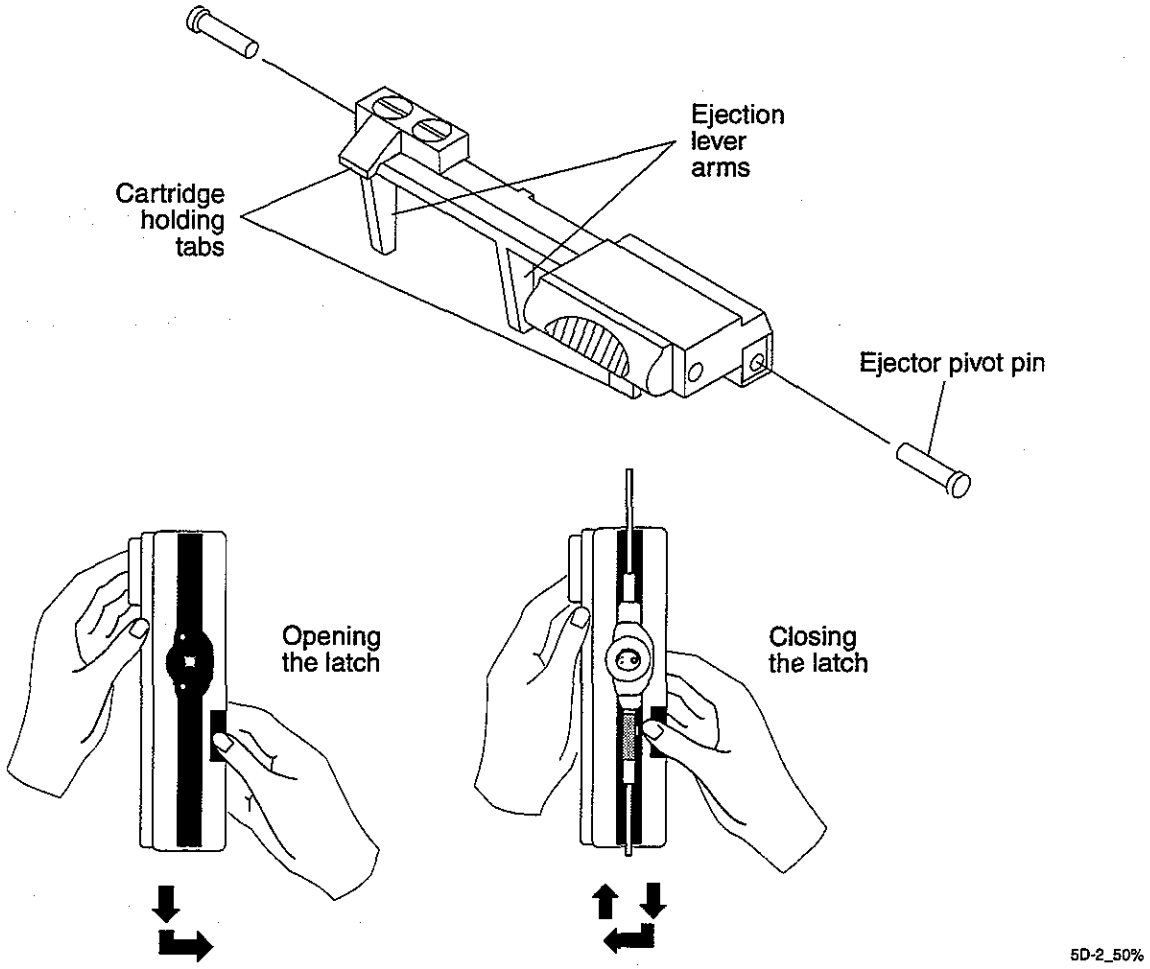

Figure 4-3. Latch Assembly

4.4
Latch Assembly

The latch holds the cartridge in the motor frame with tabs at two points to keep it properly aligned to the motor and the optics assembly. One capture point on the cartridge is the indentation on the side of the cartridge near the rotor; the second point is a protruding tab on the cartridge next to the blue foil.

Two pivot pins hold the latch assembly onto the motor frame. Once the pump is assembled, tabs hold the pivot pins in place.

The latch is opened by moving the thumb tab down and then rotating it back. This action rotates the lever arms outward from the motor frame and ejects a cartridge if one is installed. The latch is closed and the cartridge locked into place by moving the thumb tab down, inward and then upward (refer to *Figure 4-3. Latch Assembly*).

4.5 Motor Assembly

The motor assembly is attached to the motor frame with three locking screws. The motor consists of a DC brush-type, iron-less core motor with attached gearbox and integral tachometer built into the motor. An extension is attached to the motor shaft to mesh with the cartridge rotor (refer to *Figure 4-4. Motor Assembly*).

All motors are tested at the factory and a resistor may or may not be added to make all motors electrically interchangeable. If a resistor is installed, the white/red wire is attached to the resistor lead and the yellow wire is not present.

4.5.1 Motor Gearbox

The motor gearbox contains a 128:1 gear reduction to transform the relatively high speed, low torque output of the motor to the slower speed, higher torque requirements necessary to drive the rotary peristaltic cartridge pumping mechanism. The pump drive motor is driven at various speeds, depending on the rate programmed.

4.5.2 Motor Tachometer

The tachometer consists of a disk mounted on the motor shaft on the end of the motor opposite the gearbox. The flat surface of the disk is dark colored (not light-reflective) over approximately 180 degrees of rotation and is light colored (light reflective) over the remaining 180 degrees of rotation. A side-by-side, light emitting diode (LED) and phototransistor pair is mounted over the surface of the disk, such that the light beam from the LED shines on the disk, and the phototransistor receives the reflected light from the disk.

As the disk rotates, the phototransistor receives high and low levels of light reflected, depending on whether the light or dark area of the disk is closest to the phototransistor. The output of the phototransistor is connected to an electronic circuit that transforms the light-to-dark-to-light transitions into pulses that correspond to motor turns. For each 128 pulses, or motor turns, the gearbox output shaft going to the cartridge completes one full turn, resulting in a fluid delivery of approximately 0.0876 milliliters (mL). The pump's software keeps track of volume of fluid delivered by counting pulses.

4.5.3 Motor Shaft Extension

The motor shaft extension is cast with splines that mesh with the rotor in the cartridge set. The motor shaft extension is attached to the motor with a set screw.

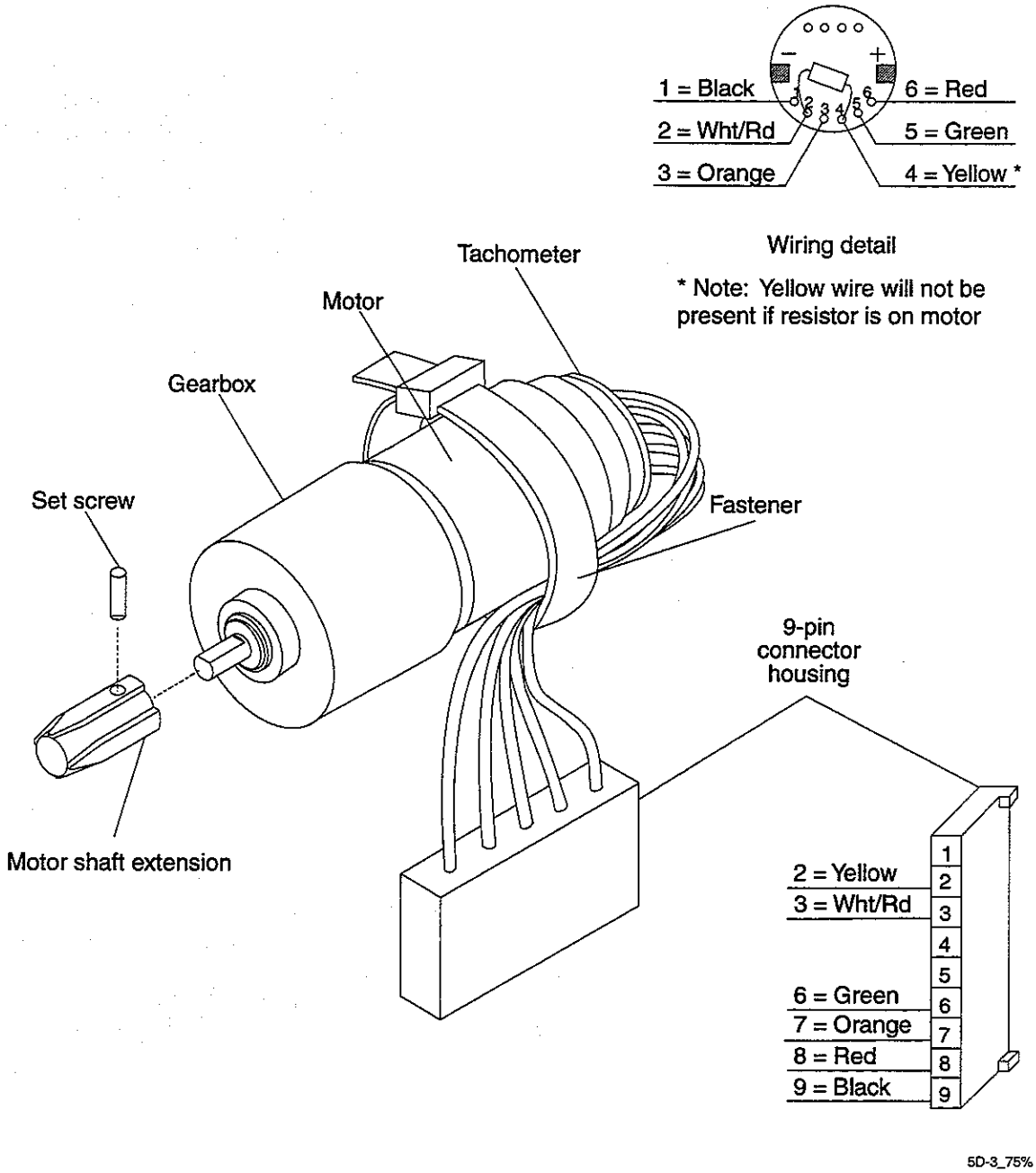

Figure 4-4. Motor Assembly

4.6
Optics Assembly

The optics assembly is attached to the motor frame with two screws. The optics assembly consists of a carrier that holds two mounted LED/phototransistor pairs and four optics surfaces (refer to *Figure 4-5. Optics Assembly Detail*). The LED/phototransistor pairs detect air-in-line and occlusion conditions by reflecting infrared light beams off a sensing chamber within the cartridge. In order to function correctly, the optics surfaces must be kept clean and free of scratches, which could impede light transmission, and the cartridge must be inserted correctly so that the sensing chamber of the cartridge aligns properly with the optics detectors.

The LED/phototransistor pairs, functioning properly with the cartridge sensing chamber, perform the following functions.

4.6.1
Air-in-Line Detection

When fluid is present in the cartridge it diffuses light from the LED, thus the air-detection phototransistor receives relatively low levels of light and remains in the OFF state. When air is present in the sensing chamber of the cartridge, however, the air behind the surface of the sensing chamber makes the sensing chamber behave as a mirror, reflecting much of the light from the LED to the phototransistor. Presence of air thus causes the air-detection phototransistor to go further into conduction. In summary, air-detection phototransistor ON = air-in-line condition.

4.6.2
Occlusion Detection

When no occlusion condition is present, light from the LED reaches the occlusion phototransistor, driving it further into conduction. When a distal occlusion condition is present, cartridge rotation causes fluid pressure to expand a small balloon segment within the cartridge-sensing chamber. When the balloon expands sufficiently such that a significant amount of the balloon surface touches the plastic on the inside of the sensing chamber, the mirror surface becomes less reflective. An occlusion condition therefore results in a decrease in occlusion phototransistor drive and causes the transistor to go further out of conduction. In summary, occlusion phototransistor OFF = occlusion condition.

4.6.3
Cartridge Installation

When no cartridge is installed in the pump, or the cartridge is incorrectly installed or defective, and the pump has been placed in the run mode, the occlusion-detection LED/phototransistor pair activates a check cartridge alarm. Once the pump is running, the occlusion alarm is displayed for any interruption of the light beam.

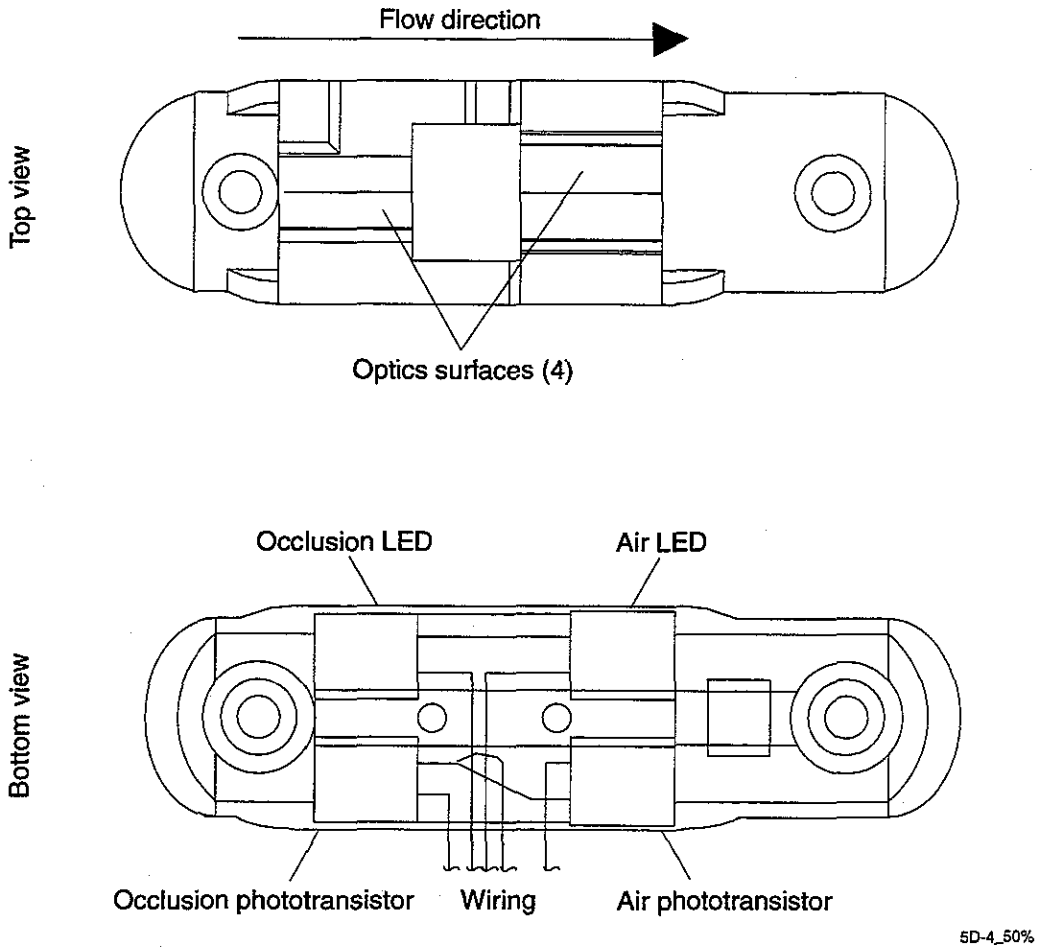

Figure 4-5. Optics Assembly Detail

4.7
Printed Circuit Board Assembly

4.7.1
Circuit Block Diagram

The basic electronic system consists of the following components (refer to *Figure 4-6. Circuit Block Diagram*).

- ❑ Microprocessor
- ❑ External EPROM
- ❑ Port Expander
- ❑ External Timer
- ❑ Alphanumeric Display Module
- ❑ Power Supply
- ❑ Tachometer
- ❑ Motor Drive
- ❑ D/A Converter
- ❑ Optics Interface
- ❑ Serial EEPROM
- ❑ Isolated Printer Interface

A particular pin of a component is identified by appending the pin number to the component designator with a dash. For example, integrated circuit 10, pin 8 is written as U10-8.

Reference designators on the PCB are as follows:

BT	battery	MOT	motor
C	capacitor	PCB	printed circuit board
D	diode	Q	transistor
E	enable test point	R	resistor
F	fuse	SP	speaker (or beeper)
J	jack	T	transformer or transducer
JP	jumper	TP	test point
L	inductor	U	integrated circuit
LED	light emitting diode	X	crystal

4.7.1.1
Microprocessor and External EPROM

The CMOS microprocessor, with internal EEPROM, counter/timers, RAM, and A/D converter, is configured in the "expanded multiplexed" mode, which utilizes an external EPROM for program memory (64KB x 8 bit). The address latch demultiplexes the multiplexed lower eight bits of the address/data buss into address bits A0 through A7. The microprocessor has a number of general-purpose I/O ports used to interface to the motor control and monitoring circuits.

The major digital modules of the circuit are interfaced to the main address and data busses of the microprocessor, and are thus considered to be memory mapped. Each digital peripheral device has its unique address and is addressed just like external memory. The microprocessor can be placed in two different low-power modes to extend battery life.

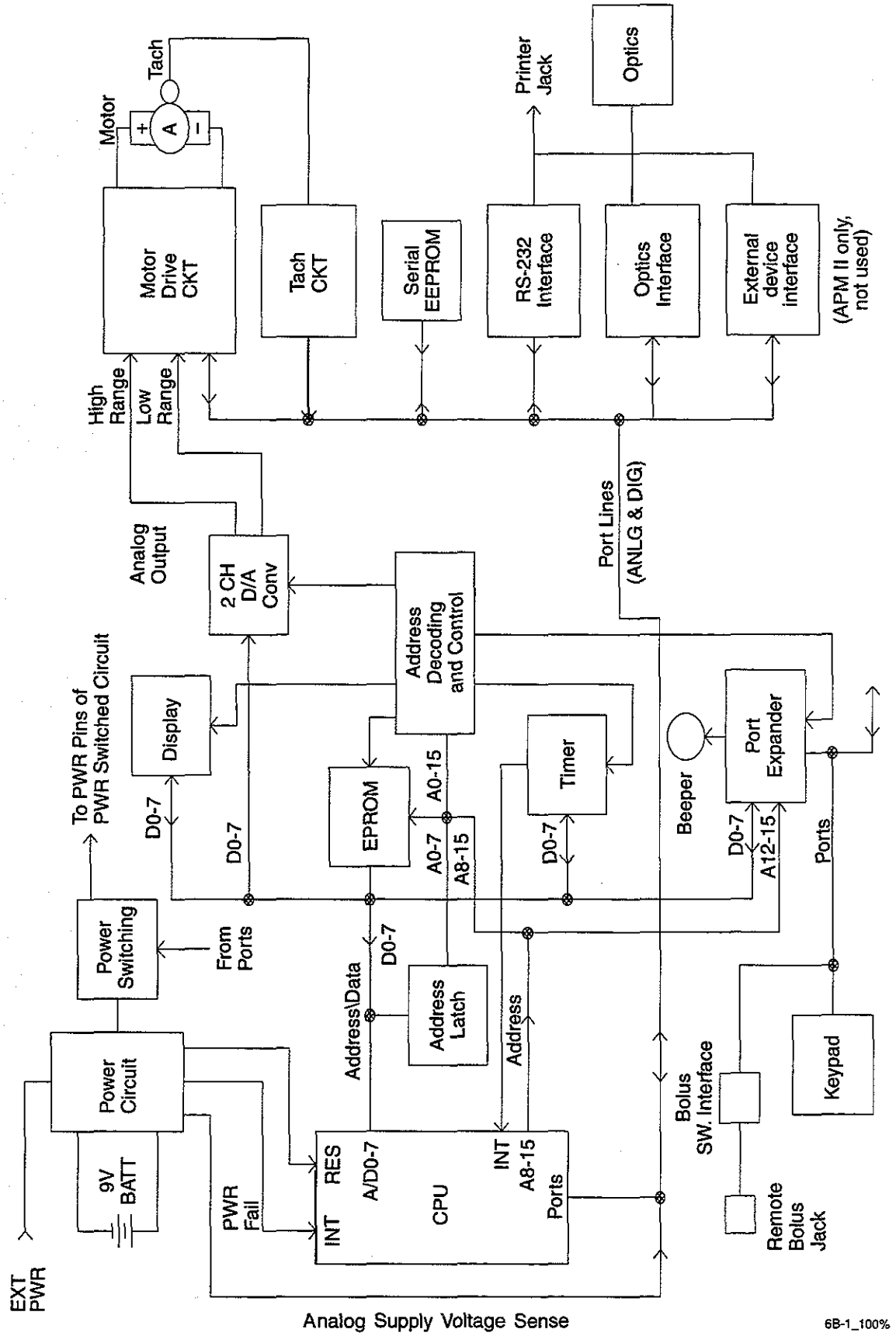

Figure 4-6. Circuit Block Diagram

4.7.1.2
Port Expander

Because the number of port lines available on the microprocessor is not sufficient to interface to the entire system, the port expander was added to increase the total number of available ports. The port expander essentially replaces port lines that are lost to address and data lines because the microprocessor is configured in the expanded multiplexed mode. The 24-key keypad is interfaced to the system via the port expander ports. The remote bolus switch jack is also interfaced to these ports.

4.7.1.3
External Timer

An external timer is utilized (in addition to the timers internal to the microprocessor) to maintain the current time and date and to generate timing interrupts to the microprocessor. Because the timer operates on only a 32-kilohertz (kHz) crystal, and the microprocessor on a 2-megahertz (MHz) crystal, the timer can operate at much lower standby currents than the microprocessor to greatly extend battery life. The microprocessor can be put in the stop mode without interrupting the external timer. The timer automatically switches over to an internal backup battery when the 5.0 V supply provided by the power circuit is no longer present.

4.7.1.4
Alphanumeric Display Module

The alphanumeric display is a 16-character-by-2-line LCD module that interfaces to the address and data busses and provides programming and operating status information to the user. The module contains all I/O interface and LCD driver circuitry built in on its own printed circuit board.

4.7.1.5
Power Supply

The power circuit provides regulated 5.0 V to most of the devices in the system and also generates power-fail interrupts and reset signals to the microprocessor under certain low-voltage operating conditions. Because some of the circuitry is utilized only part of the time, the power-switching circuit was added to allow the microprocessor to cause power to be applied to these low-duty cycle use circuits only when needed.

4.7.1.6
Tachometer

Motor speed is indicated to the microprocessor via a tachometer and a tachometer interface circuit. The circuit interfaces to either optical or magnetic Hall-effect type tachometers and allows power to be pulsed on and off to minimize power consumption.

4.7.1.7
Motor Drive

The motor drive circuit allows the motor to be driven at various input speeds as determined by the D/A outputs under microprocessor control. The motor driver provides analog (not pulsed) DC drive to the permanent magnet DC motor. Because the drive signal is not pulsed, the motor is driven with a relatively smooth, slowly varying level to maximize brush and gearbox life. Switching regulator DC-to-DC step-down converter techniques are utilized to convert the battery voltage to a lower voltage to the motor.

Motor speed is maintained relatively constant by a servo system that utilizes motor voltage and current information to indicate the motor speed. The motor drive circuit contains safety circuits to cause shutdown of the motor to prevent runaway in the event of any single component failure.

4.7.1.8
D/A Converter

To allow the motor to operate at various output speeds, a two-channel, D/A converter is used to set the speed references for the motor drive circuit. The converter provides two independent analog outputs to provide a high and low range of motor speed control, for high (bolus or loading dose) or low rates, respectively.

4.7.1.9
Optics Interface

The optics air-detection and occlusion-detection circuits interface to the separate air-detection and occlusion-detection optics. Both air and occlusion circuits have been modified to allow microprocessor control over the trip points. The optics interface allows the optics to be pulsed on and off to minimize power consumption.

4.7.1.10
Serial EEPROM

A serial EEPROM interfaces to the microprocessor via port lines and is utilized for nonvolatile storage of history data that can be reviewed on the display or printed out.

4.7.1.11
Isolated Printer Interface

An optically isolated RS-232 circuit interfaces the microprocessor port lines to a connector. The circuit has provision for one serial data line in, one serial data line out, and an input control line and an output control line.

4.7.2
Detailed Circuit Description

Refer to *Section 9, Drawings*, for the following fold-out schematics and PCB drawings:

- *Figure 9-1. APM Analog Schematic*
- *Figure 9-2. APM Microprocessor (CPU) Schematic*
- *Figure 9-3. APM Power and Miscellaneous Circuitry Schematic*
- *Figure 9-4. APM PC Board, Front Side*
- *Figure 9-5. APM PC Board, Back Side*
- *Figure 9-6. APM II Analog Schematic*
- *Figure 9-7. APM II Microprocessor (CPU) Schematic*
- *Figure 9-8. APM II Power and Miscellaneous Circuitry Schematic*
- *Figure 9-9. APM II PC Board, Front Side*
- *Figure 9-10. APM II PC Board, Back Side*

4.7.2.1
Microprocessor (CPU)

The heart of the CPU system is the Motorola 68HC11E1FN CMOS microprocessor (U2). The microprocessor is configured in the expanded multiplexed mode through the pull-up connections at MODA and MODB inputs. When the microprocessor is reset, both of these inputs are read as "1's," which instructs the microprocessor to go into the expanded multiplexed mode. Other modes can be initiated at reset by pulling one or both of these lines low with a clip lead to digital ground. For troubleshooting the address decoder circuit, initiate mode B testing by grounding TP2.

The oscillator circuit is formed via X1, R13, R11, and C1. The oscillator is a single inverter parallel resonant type operating at a crystal frequency of 2.00 MHz. The resulting microprocessor bus speed is 1/4 the crystal frequency, or 500 kHz. Resistor R13 serves to bias the single inverter in the 68HC11 somewhere in the linear region of operation. Resistor R11 acts to limit the drive energy to the relatively low power capacity X1. C1 helps to establish the correct phase shift for stable oscillation to occur. Since this circuit is especially vulnerable to even very small amounts of stray capacitance from other components or runs, the layout of this circuit is extremely critical.

4.7.2.2
Address Latch

The multiplexed address/data lines (A/D0 through A/D7) are available on PC0 through PC7, and the upper address lines (A8 through A15) are available from PB0 through PB7. Address latch U3 demultiplexes the lower address lines (A0 through A7) from the multiplexed lines A/D0 through A/D7. The address latch U3 is clocked by the U2 address strobe (AS) output connected to the G input of U3.

4.7.2.3
Program Memory

Program memory is stored in a 64KB x 8 bit CMOS EPROM (27C512), U4. The address decoding for U4 is accomplished by U17A and U14F. Any address of 1000 H or greater enables gate U7B to cause the U4 chip enable input to pulse low when E clock and Read are simultaneously high. Thus U4 is chip selected for any read operation whose address is 1000 H through FFFF H.

4.7.2.4
Port Expander

The address decode for the port expander U1 consists of U14C and internal decoding from A12 through A15. Following reset, U1 is addressed as 12XX, 13XX, 16XX, 17XX H, etc., but the software reprograms U1 to an address of 02XX, 03XX, etc. The port expander adds two extra 8-bit ports to the system as PC0 through PC7 and PB0 through PB7. Note that reset on U1 is connected to the same reset as U2, so that both ICs are reset simultaneously.

4.7.2.5
External Timer

U9, U7C, U8B, and associated inverters decode the address for the timer. U9 decodes the address 08XX H, where U7 defines the lower two nibbles to be in the range of 00 H to 1F H. U8 decodes the total address to thus be in the range of 0800 H to 081F H. The $\overline{RD}$ and $\overline{WR}$ control lines with proper timing are generated by summing the E clock from U2 with read or write, respectively, via U8C and U8D. 1M pull-up resistors such as R17, R15, and R16 pull up control lines to maintain the U5 power consumption low when the 5.0-V supply is not present. When the 5.0-V supply drops below a preset threshold, U5 contains internal circuits that automatically switch the U5 ground circuit to the negative side of the 3-V lithium backup battery BT1. Address lines A0 to A4 are connected directly to the multiplexed address/data bus, because U5 contains its own address latch clocked by the U2 address strobe (AS) connected to the U5 ALE input.

The oscillator circuit for U5 consists of components X2, C7 and C8. C7 is an adjustable trimmer capacitor to allow trimming the time base for minimal timing error. The oscillator circuit is similar to the microprocessor oscillator (U2), except that the frequency and resultant power consumption is much lower. The U5 oscillator circuit is also susceptible to coupling from other components or traces. The effective ground for the U5 oscillator is 5.0 V. Interrupts to the microprocessor can be generated through pin 6 of U5 via an open drain output pulled up by R12.

4.7.2.6
LCD Alphanumeric Display Module

U6 and U7A perform address decoding for the LCD module. U6 combines the decode of 08XX from U9 with the decode of XX20 to XX23 to result in a decode of 0820 to 0823. When this is ANDed with $\overline{A1}$ via U7A and E clock, the final resultant decode is 0820 to 0821 to the display from U8A. The ANDing of E clock with the address decode assures that only stable address decode, glitch-free enable pulses are presented to the enable display input. The display is configured to operate in a 4-bit mode with only the upper four data bits being connected to the display — DB4 to DB7. U12 serves as a switch for the bidirectional-directional AD4 to AD7 lines to allow these lines to be effectively disconnected from the display when the display power is shut off.

Display power is shut off by the microprocessor when the display is not needed in order to minimize 5.0-V drain current. Power to the display can be turned on and off via PB5 (DISPLAY PWR ON) from the microprocessor. When power to the display is shut off, gates U13A to U13C cause the control lines to the display to go to 0 V. Transistor Q7 functions as the power switch to the display to turn the display's V_{dd} power on and off. The RC and diode networks (C29, R49, D7; and C30, R50, and D6) function as time-delay circuits to assure that all signal lines to the display are either at 0 V or floating before V_{dd} to the display is shut off. When V_{dd} is turned back on, the delay circuits allow V_{dd} to be applied to the display before signal lines become active. These delays are necessary to prevent latchup in the display when switching display power on and off.

4.7.2.7
D/A Converter

Address decoding for the D/A converter is the same as address decoding for the display as described above, except that A1 is used in place of $\overline{A1}$ to give the resultant address of 0822-23 for the DAC. Address bit A0 determines whether the A or B section of the two-channel D/A converter is addressed, thus 0822 addresses section A and 0823 addresses section B of the DAC. The $\overline{WR}$ input clocks the DAC when WRITE and E clock are both high, with the same signal that clocks the $\overline{WR}$ of the timer.

4.7.2.8
Keypad

The keypad interfaces to the microprocessor via port expander ports PC0 to PC5 and PB0 to PB4. The four columns of the keypad are driven by output ports PB03, and the six rows are read by input ports PC05. Diodes D20 through D23 are in series between the column drive and the actual column of the keypad for isolation that prevents conflicts should two or more keys in the same row be pressed simultaneously. PB4 is an extra output used currently only to drive the bolus switch interface, but also serves as a spare column drive for a fifth column to allow for potential keypad expansion.

Pull-down resistors R31 to R34, R40, and R57 keep the input ports at a 0 level until a key is pressed and the column drive is pulsed. U15A allows generation of an interrupt to the microprocessor on $\overline{IRQ}$ when the interrupt is enabled via PB7 and the on/off key is pressed in row 1, provided that the appropriate column drive for the on/off key is high. The keyboard interrupt is used to allow the microprocessor to be removed from stop mode to turn the system from *off* to *on*. U13D ors the keyboard-generated interrupt with the interrupt from the timer to cause an interrupt to the microprocessor on $\overline{IRQ}$ for either a keyboard or a timer interrupt.

U15B and U15C are added as interface buffers to either the bolus switch or the remote bolus jack. R121, R56, R55, and C34 serve as a low-pass filter to attenuate potential noise or ESD pickup from the remote bolus switch. U15B and C further isolate any ESD or noise from the microprocessor port inputs. U15C will pulse high whenever the bolus switch is pressed and Column 4 drive is pulsed simultaneously. Diode D4 prevents U15C from holding row 4 drive in the low state when U15C is in its normally low-output state.

4.7.2.9
Battery Power Circuit

Input power from the two 9-V alkaline batteries or rechargeable battery pack is routed through diodes D1 and D2. These diodes prevent circuit damage in the event of an incorrect battery polarity and also prevent one battery from loading down or shorting out the other in case the two batteries are at different states of depletion and voltages (e.g., a new battery being paired with a depleted battery). These are Schottky diodes for minimal voltage drop. C20 provides low ESR filtering against fluctuations on the V_PWR line caused by such loads as pulses from the motor drive circuits, tachometer or optics circuits, or display LCD. R53, R54, and C65 form an attenuator and low-pass filter to allow the microprocessor's A/D port PE6 to sample the supply voltage. The attenuator attenuates by a factor of 0.3651 so that a 13.7-V supply voltage results in a 5.0-V input to the A/D (maximum input range). The low-pass filter serves to average out voltage fluctuations so that the microprocessor reads a sample of the average battery voltage.

Power can also reach the V_PWR line from an external power supply coupled to D5. D1, D2, and D5 provide isolation between the battery voltage and the external power supply. Normally, the power supply voltage (typically 12 V) is higher than the battery voltage, thus the power supply will override the batteries when it is plugged in and functioning. By sampling the voltage at PE6, the microprocessor can determine when the APM is operating on external (AC) power.

The supply voltage is regulated down to 5.0 V by the micropower voltage regulator U11. C21 provides additional higher frequency regulation and noise suppression on the 5.0-V bus. C22 provides energy storage and a 5.0-V bus loss-delay in the event of power failure to allow the microprocessor to store certain information in its internal EEPROM prior to being reset by the reset circuitry. C32 limits the rate of change of 5.0-V supply voltage when power is removed and then reapplied to prevent false resets from being issued by U16.

4.7.2.10
Low-Voltage Detection and Reset

The dual low-voltage detect IC U16 functions as both a microprocessor reset and a power fail interrupt to the microprocessor. The reset is generated when the 5.0-V supply is less than approximately 3.3 V. R25, R26, and R27 form a voltage divider that attenuates the 5.0-V supply voltage down to a voltage to be compared with the approximately 1.3-V internal reference of U16. C24 provides filtering to prevent any noise pulses on the 5.0-V supply line from resetting the microprocessor. R58 adds hysteresis to the sensed input VS1 to prevent ringing of the output at O1 during transitions. When the 5.0-V supply line is below approximately 3.3 V, O1 will be high, causing transistor Q3 to be driven on, which drives $\overline{\text{RESET}}$ low. C37 provides additional filtering against noise pulses causing inadvertent resets. It is important that $\overline{\text{RESET}}$ be held low to the microprocessor down to a supply voltage of approximately 1.0 V, or the point where the microprocessor crystal oscillator stops running to assure that the microprocessor does not attempt to run at very low supply voltages and cause corruption of its internal CONFIG register. At very low supply voltages, the U16 output O1 floats high, resulting in Q3 remaining on down to approximately the V_{be} cut-in voltage of Q3, or approximately 0.6 V.

Signal $\overline{\text{V BAT LOW}}$ goes low when the V BATT voltage drops below approximately 6 V. R59, R23, and R24 function as voltage dividers, and C23 functions as a filter, while R120 provides hysteresis. $\overline{\text{V BAT LOW}}$ is connected to the microprocessor's $\overline{\text{XIRQ}}$ input to indicate to the microprocessor that the supply power is failing, for example when the user removes the 9-V batteries and no power supply is connected to the pump.

4.7.2.11
Tachometer

The tachometer (encoder) circuit consists of U18 and associated components. This circuit provides a continuous square wave output to be read by the microprocessor even though the power supplied to the encoder is not continuous. This circuit allows use of either an optical or a Hall-effect type encoder. When the LED tachometer is to be used, the LED anode is connected to pin 6 and cathode to ground. When the Hall-effect sensor is used, the Hall-effect sensor ground is connected to pin 4 and the Hall-effect supply to pin 5 (+5.0 V). R46 and C28 together determine the operating frequency of U18. R45, R47, and R48 form a voltage divider to establish a set-point reference for operation of U18 at its SET input (pin 3). R48 sets a hysteresis level (Δ) above and below this selected set point of operation. The collector output from the phototransistor in the encoder is pulled up by R44 and connected to the V_{in} (pin 2) of U18. The V_{pp} output of U18 pulses high approximately every 4 ms, turns on transistor Q8, and drives the tachometer LED ON. Shortly after V_{pp} pulses high, U18 samples V_{in}. If V_{in} is higher than the SET input plus Δ, then the OUT pin will be low for the next cycle. If V_{in} is lower than the SET input minus Δ, then OUT will be high for the next cycle.

4.7.2.12
Motor Drive and Speed Control

D/A Converter Output

The current outputs of the D/A converter U20 are converted to voltages by U21A and U21C, which work in conjunction with internal resistors in U20. The output voltages at U21A and U21C are directly proportional to the value written to the D/A converter. Full scale (FF) at the converter produces an output voltage of 5.0 V.

Motor Speed

The voltage applied to the motor at any given time is equal to the sum of the back EMF generated by the motor plus the IR drop across the motor winding resistance. In other words, the speed of the motor can be determined from the motor applied voltage and the current through the motor, since the motor constant and motor resistance are known fixed quantities. In this circuit, the set-point speed is established by the DA voltage outputs from U21A or U21C. U21A is utilized to determine the high-speed range of the motor, while U21B sets the low-speed range. This set-point speed is constantly compared to the measured speed. The servo system raises or lowers the applied motor voltage to attempt to maintain the speed at the set point. For example, if the motor current increases due to increased torque loading, then voltage increases by the same amount as the resulting increase in the IR drop.

Current Sensing

Current sensing for the motor is accomplished by U34B and associated components. R71 serves as a current sensing resistor to convert motor current to a voltage (1 mA results in 1 mV of sensed voltage). Noninverting operational amplifier U34B amplifies this voltage with a gain of 40, as determined by the ratio of R61/R60. Capacitor C40 and resistor R61 together act as a low-pass filter to smooth out fast fluctuations in motor current, which results in a voltage proportional to an average motor current at U34 to U37. This output, in addition to being used by the motor speed controller is also fed back to an A/D input on the microprocessor for checks of motor current under software control.

Servo Error Amplifiers

Summing and inverting amplifier U34A sums the DA set-point voltage V_{set} and motor current I, such that the output at U34A is as follows:

(high range) $-(K_1)(V_{set})\ (K_2)(I) = -.411\ V_{set} - 7.27\ I$
(low range) $-(K_1)(V_{set})\ (K_2)(I) = -.182\ V_{set} - 7.27\ I$

Assuming the total resistance in the motor circuit consisting of winding resistance plus the Rds ON resistance of Q12 equals 24.2Ω, then (24.2)(I) represents the IR drop across the motor and drive transistor Q12. Note from equation above that V-IR can be written in terms of motor speed. For the Portescap 12-V winding motor, and 128:1 gearbox, the relationship is the following:

$S = 4.88(V\text{-}IR)$

S = output speed (in RPM) at the output shaft of the gearbox
V = motor voltage
I = is motor current
R = motor resistance

U21B inverts the normally negative voltage output signal from U34A to provide a positive voltage to the negative input of U35A, or

(high range) U35A = $.411\ V_{set} + 7.27\ I$
(low range) U35A = $.182\ V_{set} + 7.27\ I$

When the servo system is in regulation, the voltage at U35(2) will match the voltage at U35(3). Considering just the high range,

$.411\ V_{set} + 7.27\ I = .333V + V_{os}$ where V_{os} is an offset voltage = .0699V (from R98)

or, after rearranging:

$.333V - 7.27\ I = .411\ V_{set} - .07$
$14.65\ (.333V - 7.27I) = 14.65\ (.411\ V_{set} - .07)$
$4.88\ (V\text{-}21.8I) = 6.02\ V_{set} - 1$

Substitute S = (4.88)(V-IR) in the above equation set and assume R = 21.8Ω, then

(high) $S = 6.02\ V_{set} - 1$ where S = motor shaft speed in RPM and V_{set} = U21A D/A output voltage in volts, or
(low) $S = 1.95\ V_{set} - 1$

The output of the D/A amplifier $V_{set} = 5\ (D/255)$ V, where D is the decimal value written to the D/A converter, from 0 to 255 DEC. Therefore:

(high range) $S = (.118)D - 1$
(low range) $S = (.0382)D - 1$

DC-to-DC Switching Regulator

The voltage to the motor is generated by a DC-to-DC switching regulator converter consisting of U35, Q11, L1, D10, and associated components. The switching regulator technique minimizes power losses in the drive to the motor.

Q11 is driven into saturation or completely off by the output from U35A. The U35A output pulses low whenever the negative input is greater than the positive input. When Q11 is on, current flows from the power source (either battery or power supply), through L1 and charges C43 to a higher voltage. When Q1 is on, L1 causes the current to ramp up approximately linearly to its peak value. When the voltage at the motor reaches the desired servo voltage, the positive (+) input to U35A will go higher than the negative (-) input, and the U35A output will go to a high level near V_PWR, thus shutting off Q11. When Q11 shuts off, the current flow continues through the free-wheeling diode D10, and the current begins to linearly ramp down to some minimum value.

The peak and minimum current values reached vary considerably, depending on the difference between the supply voltage and the motor voltage, and the motor load torque. L1 and D10 together act to smooth the current flow and minimize current spikes and resultant power losses due to high currents. C43 smoothes the output ripple voltage to the motor to present a relatively slowly varying DC level to the motor. Because pulses are not applied to the motor, the power loss in the motor winding resistance is minimized, and brush life is extended because peak currents to the motor are maintained as low as possible. In addition, mechanical vibration to the motor and gearbox due to torque pulsations are minimized with the described drive technique.

Transistor Q26 functions to prevent Q11 from being allowed to turn on whenever the motor drive circuit is shut off (i.e., the switched 5.0 V from Q23 and Q27 goes to 0). Whenever Q26 is off, the gate of Q11 cannot be pulled low, even if the U35A output goes low.

Capacitor C44 in the voltage feedback loop serves to provide feed-forward phase compensation to help stabilize the servo loop and minimize ripple to the motor due to "hunting." C44 also helps minimize peak currents in cases where the motor voltage is very low and currents through L1 would otherwise be able to "ratchet" up without limit. C44 tends to accentuate any rapid ramp in voltage across C43 due to a current increase and causes U35A to cease driving Q11 before the L1 current can build up to sufficiently high values to cause L1 to saturate. The overall effect of C44 is to improve the power efficiency of the motor drive circuit.

U26 is a converter that converts +5.0 V to 5.0 V for power of the operational amplifiers plus serves as the negative reference to the D/A converter. Transistors Q23 and Q27 enable power to the operational amplifiers and U26 only when needed. Transistors Q23 and Q27 are controlled by the NAND gate U25A, which causes Q23 and Q27 to be driven on whenever MTR_ON is selected from PA6.

Runaway Prevention Circuits

In order for the motor drive circuits to be enabled, re-triggerable one shot U27A must be continuously pulsed by the microprocessor from PA7. When the one shot is triggered, U27-6 (Q output) is high, enabling gates U25A. If the microprocessor should fail, then the trigger pulses to the one-shot watchdog timer U27A will cease, causing the U27A Q output to go low, disabling the gate U25A. In addition, if U27A times out due to absence of trigger pulses, then the Q output goes high, causing Q19 to be driven on, which turns off Q12, blocking any possibility of current flow to the motor.

Other safety features include the ability to monitor motor voltage via voltage divider R69 and R70 and filter C45. If the microprocessor should detect voltage at the motor after the drive command to the motor has been removed, then the microprocessor stops pulsing the watchdog timer and causes the motor drive to be disabled. Additionally, the tachometer circuit can be monitored for presence of tachometer pulses when the motor should be disabled. If tachometer pulses are still present after the MTR_ON drive signal is brought low, then the watchdog timer trigger is terminated.

The runaway protection circuitry is designed to prevent runaway in the event of any single component failure. For instance, if Q11 becomes shorted from drain to source, then the tachometer pulse rate is, in most cases, higher than expected and the motor voltage less motor current multiplied by motor resistance (V-IR) is higher than expected. In addition, tachometer pulses and motor voltage remain present after MTR_ON is brought low. In this case, the microprocessor software terminates drive pulses to U27A and transistor Q12 is turned off, blocking any current flow to the motor. The effect is the same for a failure in U35A, which causes Q11 to be driven on at improper times. Certain failures of two or more components simultaneously could result in a runaway condition. For instance, if Q11 and Q12 both develop a short from drain to source, then the motor turns continuously. Under this condition, however, the microprocessor causes the beeper to sound continuously to alert the user of a failure condition.

Other failures in the motor speed control circuitry such as in the D/A converter, in the error operational amplifiers, or in the switching regulator can cause the motor to run at too high a speed, which is detected by either a tachometer pulse rate or by a V-IR value at the motor above an expected worst-case threshold.

4.7.2.13
Air and Occlusion Detection Optics

Air and occlusion LEDs are connected in series and pulsed by Q17. Q17 with its emitter-resistor R87 functions as constant current source to maintain a relatively constant current to the LEDs in spite of battery voltage fluctuations or LED forward-drop variations. A positive-going pulse is generated at the microprocessor port PA4, which causes Q18 and Q24 to turn on simultaneously. D11 and D12 drop the approximately 5.0-V level at the drain of Q18 by approximately 1.2 V to place a reference voltage at the base of Q17 of approximately 3.8 V. The emitter voltage at Q17 is maintained at approximately 2.9 V, which maintains a constant current through R87 of 2.9 V/82 Ω = 35 mA.

The occlusion phototransistor collector is pulled up through resistor R81 to 5.0 V and is connected to the A/D input PE1. An occlusion or check-cartridge condition is displayed whenever the collector-pulsed voltage is above a limit established by software (typically 2.5 V). An occlusion condition is represented by a reduction in light returned from the occlusion-sensing surfaces in the sensing chamber, and thus a reduction in phototransistor collector current (resulting in an increase in collector voltage).

The air detection phototransistor collector is connected to A/D input port PE0 and pulled up by R84 and R85, when in the low gain setting (Q20 off). When PD5 is low, the air-high gain is selected and Q20 is off, disconnecting R85 from the collector pull-up network, which increases the overall collector resistance. An increase in collector resistance causes an increase in detector sensitivity to light. Air is detected whenever the collector voltage is below a reference threshold as established under software control (typically 2.5 V). An air detection is caused by an increase in the amount of light returned from the air-sensing surfaces, and thus an increase in air-phototransistor collector current (resulting in a decrease in collector voltage).

4.7.2.14
Nonvolatile Memory

History information is stored in a serial EPROM, U19. The serial EPROM input and output data is handled by PD2 and PD3, and PD4 generates the clock signal required by the X24C16S EPROM.

4.7.2.15
RS-232 Serial Data Interface for Printer

A printer can be connected to the jack J11 for printout of history data. One of two special accessory cables (supplied by Abbott Laboratories) can be used to interface the pump to one of the three recommended small portable printers. U32 and U33 work together as a chip set to provide optical isolation between the printer jack J11 and the ports PD0, PD1, PA2, and PA3. U32 contains an internal circuit that drives transformer T1 in push-pull fashion. U33 takes the secondary output of T1 and converts the AC waveform to approximately +10 and -10 V supplies at V+ and V-, respectively. Capacitors C53 and C54 filter out the ripple at the switching frequency. U32 and U33 act together as both opto-isolator drivers and receivers to interface to opto-isolators U28 and U31, respectively.

The following is an example to illustrate how the interface functions. Suppose that the SERIAL_OUT line from PD1 goes high. U32-4, T1IN, then goes high and U32-3, T1LDR, goes high, driving the LED in U28 ON. The phototransistor collector in U28 then goes low, causing U33-12, T1OUT, to swing close to the negative RS-232 rail, as referenced to SIGNAL_GND (U33-14). The path in the reverse direction (e.g., from U33-10 to U32-9) works similarly. Both path directions invert the logic (i.e., a high level in causes a low level out).

Section 5
Maintenance and Service Tests

This section contains preventive maintenance information, the performance verification test (PVT), and the burn-in test. The PVT consists of electrical and delivery tests designed to verify proper operation of the pump. The PVT may be performed during routine maintenance or for diagnostic purposes. Performance of the burn-in test following the PVT is recommended; this test verifies that the pump can be run for 24 hours without alarms and, afterward, that test data is cleared from the pump's logs before the pump is used on a patient.

5.1
Preventive Maintenance

Follow a preventive maintenance program that involves regular inspection and cleaning of the pump and accessories.

The preventive maintenance program recommended in this manual includes a checklist for periodic inspection of the pump, guidelines for exterior cleaning and sanitizing, and a list of recommended cleaning agents.

User options
program code
enter
0457

Unlock pump
Enter ↑ ↑

5.1.1
Inspecting the Pump and Accessories

Periodically perform an external inspection of the pump and accessories for damaged parts and cosmetic defects. Also inspect the pump after repair or during cleaning. Replace assemblies, components, or accessories as required.

5.1.1.1
Pump Inspection

Inspect the following components:

Front Case

- ❑ Inspect the case for cracks or breakage.
- ❑ Inspect the keypad and the LCD for any physical damage.

Motor Frame

- ❑ Check the latch mechanism for smooth operation, free of binding. When closed, the latch should be flush with the back case.
- ❑ Verify that the optics surfaces are free of any dirt or residue.
- ❑ Verify that the motor frame is not damaged.
- ❑ Install a closed cartridge (look for the dot inside the red circle); confirm the cartridge fits smoothly into the motor frame and is properly locked into place; confirm that the latch closes completely.

External Jacks

- ❑ Test the printer, power, and bolus jacks by inserting the appropriate connectors into the jacks and confirming full connection.
- ❑ Check for bent pins and cracked or loose jacks.

Battery Installation

- ❑ Verify easy installation and removal of the batteries and battery door.
- ❑ Check that the battery contacts are free of any residue and are not bent or broken.
- ❑ Verify that the pump turns on with one battery in either battery position. Try each battery position one at a time.

External Power Supply Jack

- ❑ Remove the batteries. Connect the AC power adapter to the power jack on the bottom of the pump. Verify that the unit powers on.
- ❑ Verify that the LED next to the international plug symbol on the keypad is lit.

  Note: For AC power adapters with a battery backup module attached to the cord, the power LED remains lit if the plug is pulled from the outlet because the backup battery module continues to provide power. The power LED will go off when the AC adapter plug is removed from the pump jack.

Back Case

- ❑ Inspect the case for cracks or breakage.
- ❑ Verify that all screws are in place.
- ❑ Verify that all labels are legible and properly attached.

5.1.1.2
Accessories Inspection

Inspect the accessories as follows:

Rechargeable Battery Pack:

- ❑ Ensure that the pack slides fully into place and that the knob locks the pack firmly to the pump.

AC Power Adapter:

- ❑ Remove the batteries (if in place) and confirm that the pump powers on with only AC power.
- ❑ Check the cord for damage or fraying; confirm a connection to the adapter box.

Remote Bolus Cord and Switch:

- ❑ Confirm a connection and check the cord and bolus switch for damage.

Printer and Printer Cable:

- ❑ Inspect the printer cable for damage.
- ❑ Inspect the connections to the pump and printer; check the pins for damage.
- ❑ Inspect the printer following the manufacturer's recommendations.

Lockbox and Pole Clamp:

- ❑ Confirm that the locking mechanism and hinges on the lockbox door are secure.
- ❑ Assure that the pole clamp attaches firmly to the pole and the pump and that all hardware is in place.

5.1.2
Cleaning the Pump

The pump case exterior and cartridge channel should be kept clean and free of contamination. Establish a routine schedule for cleaning the pump.

WARNING:

Disconnect the pump from AC power prior to cleaning.

CAUTION: To avoid mechanical or electronic damage, do not immerse pump in any fluids or cleaning solutions.

CAUTION: Some cleaning and sanitizing compounds may slowly degrade components made from some plastic materials. Using abrasive cleaners or cleaning solutions not recommended by Abbott Laboratories may result in product damage. Do not use compounds containing combinations of isopropyl alcohol and dimethyl benzyl ammonium chloride.

CAUTION: Do not sterilize by heat, steam, ETO, or radiation. Apply disinfectants to the outside surface of the pump only. Do not use abrasive cleaners or materials on the pump. Using abrasive cleaners or cleaning solutions not recommended by Abbott Laboratories may result in product damage.

CAUTION: To avoid pump damage, cleaning solutions should be used only as directed in the table on the following page. The disinfecting properties of cleaning solutions vary; consult the manufacturer for specific information.

CAUTION: Never use sharp objects such as pens, pencils, fingernails, paper clips, needles, etc., to clean the pump.

Table 5-1. Cleaning Solutions

Cleaning Solution	Manufacturer	Preparation
Vesphene® II se	Calgon Vestal Laboratories	Per manufacturer's recommendation
Manu-Klenz®	Calgon Vestal Laboratories	Per manufacturer's recommendation
Formula C™	Diversey Corporation	Per manufacturer's recommendation
LifeCare® Germicidal Towelette	Manufactured for Abbott Laboratories	Per manufacturer's recommendation, use undiluted
Super Edisonite®	S. M. Edison Chemical Co.	Per manufacturer's recommendation
Household bleach	Various	Per hospital procedures; do not exceed one part bleach in ten parts water

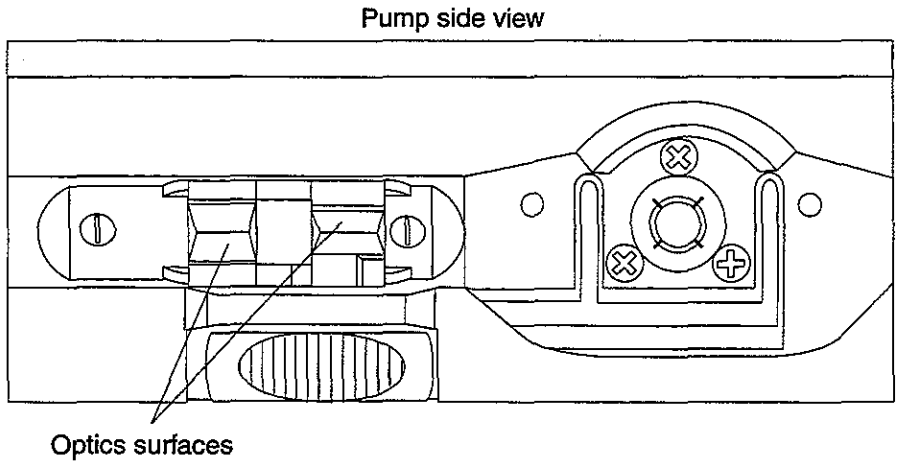

Figure 5-1. Cartridge Channel Detail

Clean the pump as follows:

- ❑ Clean the exposed surfaces of the pump with a soft, lint-free cloth dampened with the appropriate cleaning solution listed in *Table 5-1. Cleaning Solutions*. The pump is not affected by the appropriate cleaning solutions.
- ❑ If the pump has been in an isolation area, disinfect the external surfaces of the pump.

  Note: Not all cleaning solutions are disinfectants; check the product labeling.

CAUTION: Do not sterilize by heat, steam, ETO, or radiation, as these methods may cause the pump to malfunction.

- ❑ Clean the cartridge channel on a regular basis. Use a moistened cotton swab to clean the optics surfaces (refer to *Figure 5-1. Cartridge Channel Detail*).
- ❑ Wipe the solution from the pump surface with a moistened cloth. Do not immerse the pump in water. Assure that the optics surfaces are free of detergent film.

  Note: Wiping the pump free of cleaning solutions helps prevent detergent build-up, which could affect the performance of the pump.
- ❑ Dry the pump after cleaning.

5.2
Performance Verification Test (PVT)

The performance verification test (PVT) is designed for operation verification, preventive maintenance, and diagnostics.

Operation Verification — The PVT must be performed to verify proper pump operation after any repair or replacement of pump assemblies or components.

Preventive Maintenance — As part of a preventive maintenance schedule, it is recommended that the PVT be conducted periodically or per hospital procedures.

Diagnostics — This test can be used for diagnostic purposes during the troubleshooting of a malfunctioning pump.

CAUTION: Many test steps are dependent on the correct outcome of steps previously performed; therefore, all tests are to be performed in the order presented to assure accurate results. If test results for a step do not meet the parameters given in this manual, stop testing, rework the pump, and start testing from the beginning of the PVT.

5.2.1
Electrical Test

5.2.1.1
Equipment

- ❑ PROVIDER® set cartridge $15
- ❑ Optics test block (optional) $10
- ❑ 1-Ohm current-sensing box $350
- ❑ Variable power supply
- ❑ Battery substitution block $30
- ❑ Hysteresis torque brake fixture with 18-V power supply $600
  (a cartridge from any PROVIDER set may be substituted)
- ❑ Digital multimeter (DMM), Fluke® Model 77, or equivalent
- ❑ Kodak Diconix® 150 Plus or 180si printer, or Seiko® DPU411 printer with appropriate printer cable
- ❑ 12-V power supply, Abbott List No. 13868 or List No. 13036
- ❑ Remote bolus switch

CAUTION: Be careful not to interchange the 12-V and 18-V power supplies during testing.

5.2.1.2
Test Setup

For test setup diagram, refer to *Figure 5-2. Electrical Test Setup*.

1. Set the variable power supply to 8.0 V. Connect 1-Ohm current-sensing box to positive (+) and negative (-) output of power supply. Turn switch on 1-Ohm current-sensing box to position A.

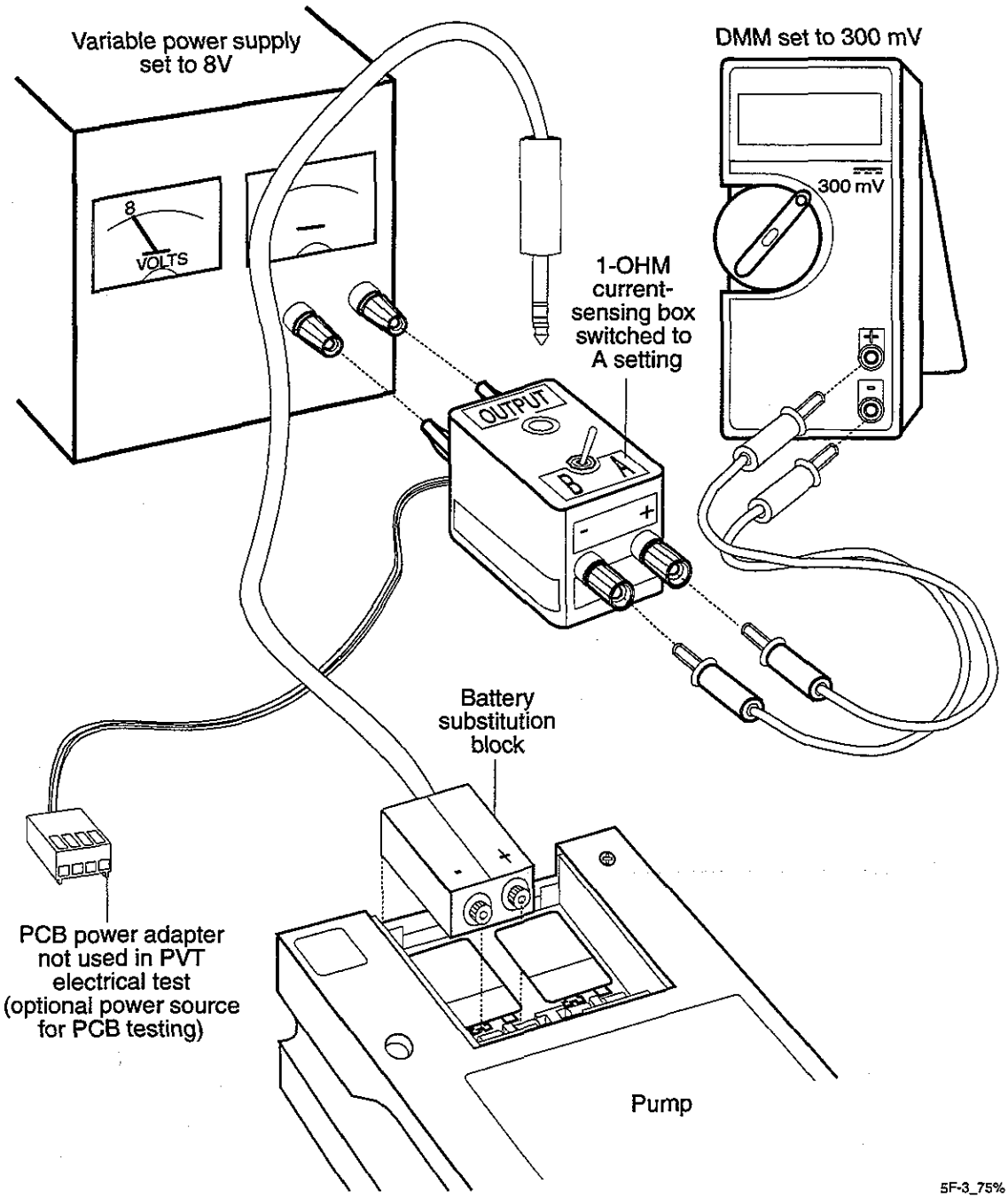

Figure 5-2. Electrical Test Setup

2. Connect the battery substitution block in place of the battery in the pump from the 1-Ohm current-sensing box.

3. Connect the DMM output from the 1-Ohm current-sensing box to volt and ground of the DMM. Set the DMM to the mV range.

4. Immediately after applying power, press and hold both the [ENTER] and [ON/OFF] keys simultaneously for approximately **eight seconds**. The display reads KEYPAD CHECK | RELEASE KEY during this time. on/off yes ↓ 0 4

   The following display appears after approximately 8 seconds:

```
VERSION NUMBER
OR USE ARROWS
```

5. After stabilizing for at least two minutes, verify that the battery current drain reading on the DMM is 15 mA or less (1 mV = 1 mA).

5.2.1.3
Display Check

1. Press the [UP ARROW] or [DOWN ARROW] key until the following display appears:

```
DISPLAY CHECK
OR USE ARROWS
```

2. Press [ENTER] and verify that the display reads as follows:

```
0123456789ABCDEF
GHIJKLMNOPQRSTUV
```

3. Press [NO] once to exit.

5.2.1.4
Keypad and Remote Bolus Check

1. Press the [UP ARROW] key until the following display appears:

```
KEYPAD CHECK
OR USE ARROWS
```

2. Press [ENTER]. Press each key on the keypad and verify that the displayed value matches the key pressed.

3. Plug in the remote bolus switch. Press the remote bolus switch and verify that BOLUS reads on the display. No beep will occur.

4. Press and hold the [NO] key for approximately five seconds to exit the keypad check.

5.2.1.5
High-Speed Motor Test

1. Install a cartridge in the pump or attach the torque brake fixture to the pump in place of the cartridge.

2. If using the torque brake fixture, turn on the power supply for the brake.

3. Press the [UP ARROW] key until the following display appears:

```
HIGH SPEED MOTOR
OR USE ARROWS
```

4. Press [ENTER] and the display shown in *Figure 5-3. Motor Test Display*, appears.

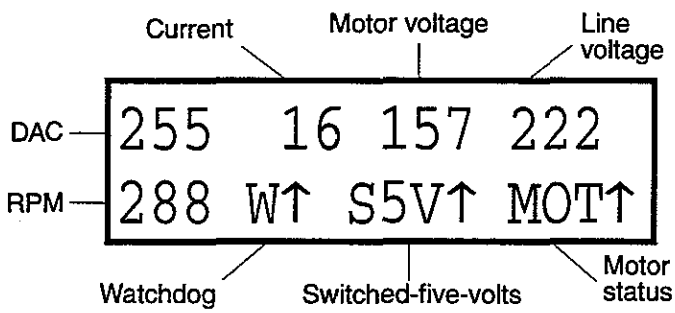

Note: Values shown are examples only.

Up arrow indicates function is on.

Down arrow indicates function is off.

RPM value does not appear on display until DAC speed is ramped up.

5F-1_25%

Figure 5-3. Motor Test Display

5. Press the [7] key to enable the watchdog (W↑) and press the [8] key to turn on the motor (MOT↑).

6. Press the [1] key to enable switched-five-volts (S5V↑).

7. Press and hold the [UP ARROW] key to ramp up the digital analog converter (DAC) value. Verify that the speed increases smoothly and that the motor is turning.

8. With the DAC value at a maximum 255, verify that the supply current drain does not exceed 45 mA.

   Note: On voltmeter reading 1 mV = 1 mA.

9. Verify that the motor RPM reading on display is 25.0 to 35.0.

   Note: The far-right digit for RPM is tenths, although the decimal point is not shown; therefore RPM value displayed is 250 to 350.

10. Verify that the motor current on the display is 82 or less.

11. Press the [4] key to disable watchdog (W↓). Verify that the motor is not turning.

12. Press the [7] key to enable the watchdog (W↑). Verify that the motor is turning.

13. Press the [5] key to disable the motor. Verify that the motor turns off (MOT↓).

14. Press the [RESET] key to set the DAC value to zero.

15. Press [NO] to exit.

5.2.1.6
Low-Speed Motor Test

1. Press the [DOWN ARROW] key until the following display appears:

```
LOW SPEED MOTOR
OR USE ARROWS
```

2. Press [ENTER] and the display shown in *Figure 5-3. Motor Test Display*, appears.

3. Use the [UP ARROW] or [DOWN ARROW] keys to set the DAC value to 90.

4. Press the [7] key to enable the watchdog (W↑) and press the [8] key to turn on the motor (MOT↑).

5. After the reading stabilizes, verify that the motor RPM reading on display is 1.9 to 3.5.

   Note: The far right digit for RPM is tenths, although the decimal point is not shown; therefore the RPM value displayed is 19 to 35 RPM.

6. Connect the 12-V power supply to the EXTERNAL POWER jack.

7. Verify that the AC power light on the keypad is on.

8. Disconnect the 8-V power supply by removing the battery substitution block.

9. After the reading stabilizes, verify that the motor RPM reading on the display is 1.9 to 3.5.

10. Press the [5] key to disable the motor. Verify that the motor turns off (MOT↓).

11. Remove the cartridge or disconnect the torque brake from the pump and turn off the torque brake power.

12. Press [NO] to exit.

13. Reinsert the battery substitution block from 8-V supply into one side of the battery compartment.

14. Disconnect the 12-V power supply.

15. Verify that the AC power light on the keypad turns off.

5.2.1.7
Optics Test

The optics test portion of the electrical test requires an optics test block. If the optics test block is not available, skip this test in the software test mode cycle and proceed to *Section 5.2.1.8, Set Clock*.

If the optics test portion is bypassed, use the alternate procedure listed in *Section 5.2.3, Optional Optics Test*.

1. Press the [DOWN ARROW] key once and the following display appears:

```
OPTICS CHECK
OR USE ARROWS
```

2. Press [ENTER] and the display shown in *Figure 5-4. Optics Test Display*, appears.

3. Verify that the gain setting is low (↓GAIN). Press the [DOWN ARROW] key if necessary to change the setting to low. Verify that air and occlusion readings are each greater than 230.

4. Check the optics test block for scratches, dirt, or film.

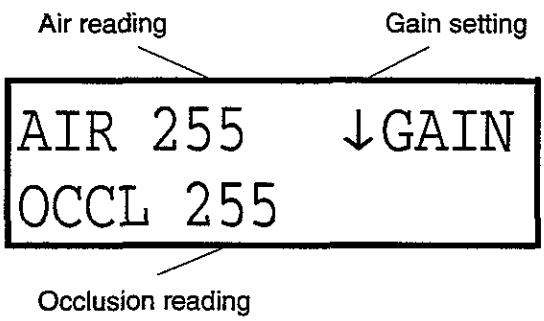

Note: Values shown are examples only.

Up arrow indicates high gain.

Down arrow indicates low gain.

5F-2_25%

Figure 5-4. Optics Test Display

Note: The optics test block cannot detect air and/or occlusion properly if the optical surfaces are not clean or if scratches interfere with the light transmission between the LEDs and phototransistors. If surface defects are apparent, replace the optics test block before performing this test.

5. Position the pump with the cartridge channel facing up. Insert the optics test block into the optics carrier. The arrows must be pointing in the direction of flow, which is toward the bottom of the pump (refer to *Figure 5-5. Optics Test Block Placement*).

6. Check that the optics test block is seated firmly in the carrier. Do not move the pump while this test is in progress or the optics test block may be dislodged, thus invalidating the test results.

7. Verify that the value marked AIR on the display is 14 through 40 and that the value marked OCCL is 12 through 40.

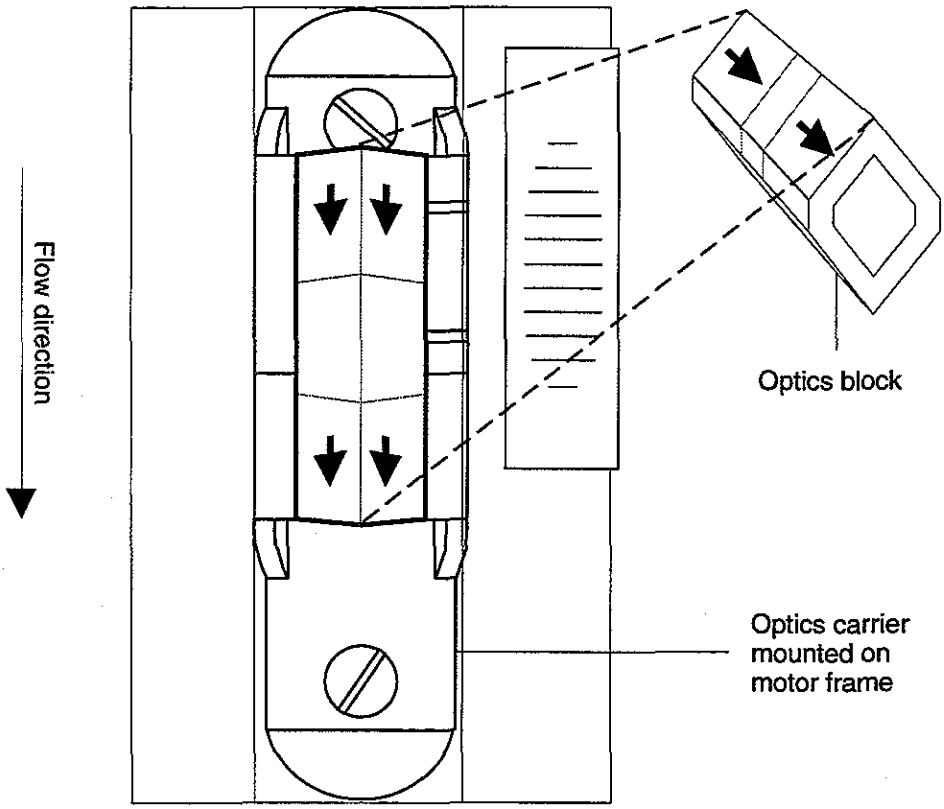

5F-4B_50

Figure 5-5. Optics Test Block Placement

8. Remove the optics test block.

9. Press [NO] to exit optics test.

5.2.1.8
Set Clock

1. Press the [UP ARROW] key until the following display appears:

```
SET CLOCK
OR USE ARROWS
```

2. Press [ENTER] and the set clock display appears.

3. Follow the instructions on the display to set the clock to match the current time (refer to the tips at the left). Press [ENTER] to accept each entry.

5.2.1.9
Printer Test

1. Press the [UP ARROW] or [DOWN ARROW] keys until the following display appears:

```
PRINTER TEST
OR USE ARROWS
```

2. Connect the printer to the printer port using the correct cable for the printer utilized.

3. Press [ENTER] and PRINTING appears on the display.

4. Verify that the printer completes the following test pattern:

```
************** PRINT TEST **************
,!"#$%&'()*+,-./0123456789:;<=>?@ABCDEFG
HIJKLMNOPQRSTUVWXZY[\]^_'abcdefghijklmno
pqrstuvwxyz{|}~ !"#$%&'()*+,-./012345678
9:;<=>?@ABCDEFGHIJKLMNOPQRSTUVWXYZ[\]^_'
abcdefghijklmnopqrstuvwxyz{|}~ !"#$%&'()
********** PRINT TEST COMPLETE *********
```

5. Disconnect the printer.

5.2.1.10
Initialize NVRAM

1. Press the [UP ARROW] or [DOWN ARROW] keys until the following display appears:

```
INITIALIZE NVRAM
OR USE ARROWS
```

2. Press [ENTER] to begin the NVRAM initialization.

3. Wait for the initialization to complete.

5.2.1.11
Clear Logs

1. Press the [DOWN ARROW] key until the following display appears:

```
CLEAR ERROR LOGS
OR USE ARROWS
```

2. Press [ENTER] to begin clearing the logs.

3. Wait for clearance of the logs to complete.

4. When clearance is complete, turn off the variable power supply and wait for the beeper to sound continuously.

5.2.1.12
Return to Normal Operating Mode

1. To verify that the pump is out of the diagnostic test mode and in normal operating mode, turn on the power and verify that the pump completes a self test and the display shows either of the following screens:

EPIDURAL MODE YES OR NO	or	CLEAR HIST & Rx? YES OR NO

2. Press the [ON/OFF] key and verify that the display shuts off.

3. Verify that the supply current drain on the DMM (1 mV = 1 mA) is 1.5 mA or less.

4. Disconnect the battery substitution block from the pump.

5.2.2
Delivery Test

Either of the two procedures listed here may be used to perform the delivery test. The wet delivery test procedure requires fluid delivery using a complete set, while the dry delivery test procedure uses a turns counter and cartridge housing to simulate fluid delivery.

5.2.2.1
Equipment — Wet Test

- ❑ PROVIDER cartridge set
- ❑ Beaker or other fluid reservoir
- ❑ 25-mL graduated cylinder (0.2 graduations)
- ❑ 20+ mL of fluid (water)
- ❑ Duracell 9-V batteries (2)

5.2.2.2
Equipment — Dry Test

- ❑ Cartridge housing (do not use a regular cartridge set, as it will activate the alarm)
- ❑ Turns counter
- ❑ 12-V power supply
- ❑ Duracell 9-V batteries (2)

5.2.2.3
Test Setup — Wet Test

1. Install the two 9-V batteries in the pump.

2. Install a primed cartridge set with a fluid reservoir into the pump. Refer to the pump's *System Operating Manual* for detailed instructions regarding cartridge installation if necessary.

3. Position a graduated cylinder to measure the liquid delivered.

5.2.2.4
Test Setup — Dry Test

1. Install the two 9-V batteries into the pump.

2. Install the cartridge housing on the motor frame.

3. Connect the 12-V power supply to the turns counter.

4. Press RST on the turns counter to reset the display to 0.0.

5. Connect the turns counter to the pump.

5.2.2.5
Pump Programming

Press the pump [ON/OFF] key, if necessary, to allow the display to become active. The pump completes a self-test. If a program is saved, the following screen displays:

CLEAR HIST & Rx? YES OR NO	Press: [YES]

Program the pump as follows:

EPIDURAL MODE YES OR NO	Press: [YES]
1 CONT 3 BOTH 2 BOLUS ONLY	Press: [1] for continuous
SELECT ML ONLY YES OR NO	Press: [YES]
SET RATE 0.0 ML/HR	Press: [2], [5] and [ENTER]
LOADING DOSE? YES OR NO	Press: [YES]
SET LOAD DOSE 0.0 ML	For dry test, press: [1], [0] and [ENTER] For wet test, press: [2], [0] and [ENTER]
DEL. LOAD DOSE? YES OR NO	Press: [YES]
TO INFUSE, PRESS 'LOADING DOSE'	Press: [LOADING DOSE]

5.2.2.6
Delivery Test in Progress

The pump runs and the loading dose amount displayed advances as the dose is delivered. The following messages alternate:

DEL. LOAD DOSE X.X ML	 ON BATTERIES

Note: The loading dose delivery rate is approximately 125 mL/hr.

The pump requires approximately five minutes to deliver the 10-mL dose for the dry test, and approximately ten minutes to deliver the 20-mL dose for the wet test.

5.2.2.7
Delivery Test Results — Wet Test

1. Confirm that the dot in the cartridge turns clockwise (refer to *Figure 5-6. Delivery Test*).

   When the pump completes the loading dose delivery, the following messages alternate on the display:

   For APM:

TOTAL AMOUNT 0.0 ML	'ENTER' IF DONE 0.0 ML

   For APM II:

CONTAINER SIZE 0.0 ML	'ENTER' IF DONE 0.0 ML

2. Measure the total amount of fluid delivered to the container. Verify that the amount is between 19.0 and 21.0 mL.

3. If optics test was performed as part of the electrical test (refer to *Section 5.2.1.7, Optics Test*), press the [ON/OFF] key to turn off the pump.

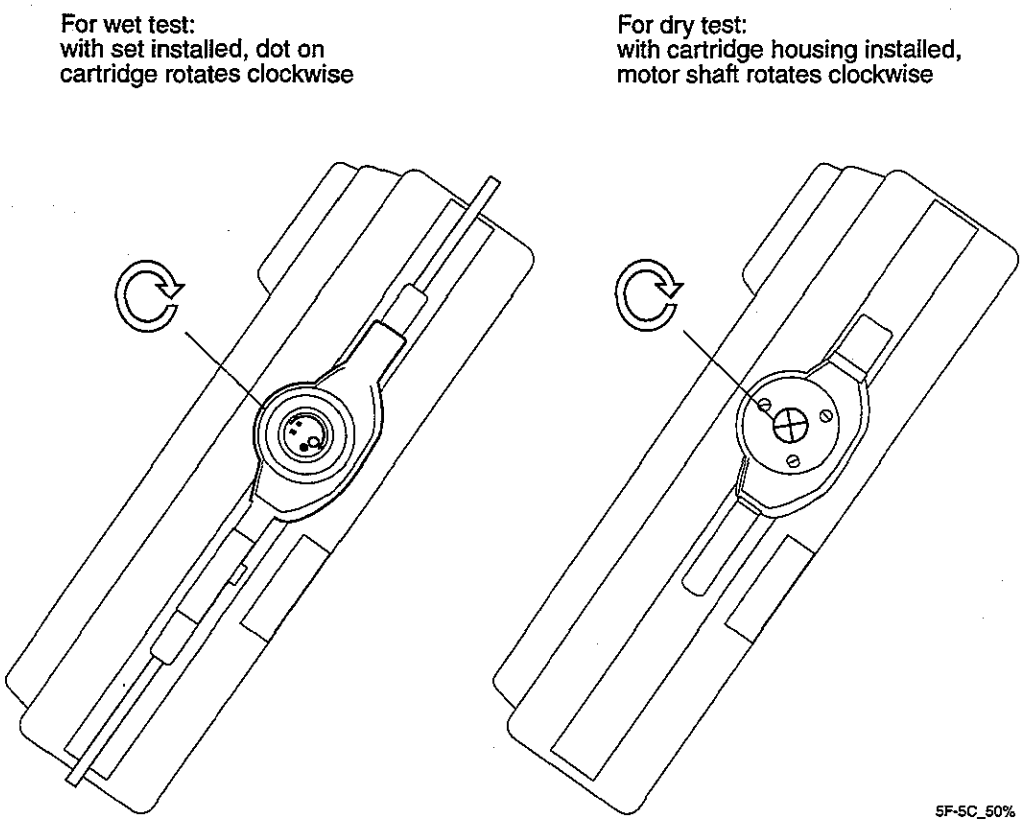

Figure 5-6. Delivery Test

4. If the optics test has not yet been performed, press [1] [0] [0] to enter a total amount/container size of 100 mL and proceed to *Section 5.2.3, Optional Optics Test.*

5. For APM II only, the air sensitivity selection display appears:

```
 AIR SENSITIVITY
1=HI 2=LOW 3=OFF
```

6. Press the [1] key to select the high sensitivity setting.

   Note: For APM, high air sensitivity is the default setting.

5.2.2.8
Delivery Test Results — Dry Test

1. Confirm that the cartridge rotor turns clockwise (refer to *Figure 5-6. Delivery Test*).

   When the pump completes the loading dose delivery, the following messages alternate on the display:

   For APM:

```
TOTAL AMOUNT
0.0 ML
```

```
'ENTER' IF DONE
          0.0 ML
```

   For APM II:

```
CONTAINER SIZE
0.0 ML
```

```
'ENTER' IF DONE
          0.0 ML
```

   Note: Be careful not to disturb turns counter or pump before reading is taken to assure accurate test results.

2. Verify that the display on the turns counter is between 9.95 and 10.05 mL.

3. Disconnect the turns counter from pump.

4. If optics test was performed as part of the electrical test (refer to *Section 5.2.1.7, Optics Test*), press the [ON/OFF] key to turn off the pump.

5. If the optics test has not yet been performed, press [1] [0] [0] to enter a total amount/container size of 100 mL and proceed to *Section 5.2.3, Optional Optics Test.*

6. For APM II only, the air sensitivity selection display appears:

```
 AIR SENSITIVITY
1=HI 2=LOW 3=OFF
```

7. Press the [1] key to select the high sensitivity setting.

   Note: For APM, high air sensitivity is the default setting.

5.2.3
Optional Optics Test

These occlusion and air detection tests verify correct operation of the optics if the proper equipment is not available to run the optics test portion of the electrical test (refer to *Section 5.2.1.7, Optics Test*). The optional optics test must be performed after the delivery test has been completed.

5.2.3.1
Equipment

- ❑ PROVIDER cartridge set
- ❑ Beaker or other fluid reservoir
- ❑ 25 mL graduated cylinder (0.2 graduations)
- ❑ 10+ mL of fluid (water)

5.2.3.2
Occlusion Test

1. Install a primed PROVIDER set with water, if not already installed. If necessary, refer to the pump's *System Operating Manual* for detailed instructions regarding priming a set and installing the cartridge.

2. Press the [RUN/STOP] key to enter the run mode.

3. Occlude the distal end of the set by clamping off the tubing. Verify that the occlusion alarm occurs (wait up to one minute).

4. Remove the occlusion to clear the alarm by removing the clamp from tubing. Press the [RUN/STOP] key to return to the stop mode.

5. Remove the cartridge set from the pump.

5.2.3.3
Air-Detection Test

1. Clear fluid from the cartridge set. Install the dry cartridge in the pump.

2. Press the [RUN/STOP] key to enter the run mode. Verify that the air-in-line alarm occurs.

3. Press the [RUN/STOP] key to silence the alarm. Press the [ON/OFF] key to turn off the pump.

5.2.4
Troubleshooting

Refer to *Table 6-2. System Error Codes* and *Table 6-3. Malfunction Codes* in *Section 6, Troubleshooting*, for troubleshooting.

5.3
Burn-In Test

Perform the burn-in test after the pump has passed the PVT.

Note: This test is recommended but not required.

Note for international pump configurations only: per IEC requirements, the air-in-line alarm cannot be turned off. The burn-in test must be performed with a fluid-filled cartridge.

5.3.1
Equipment

- ❑ Pump that has passed the PVT
- ❑ PROVIDER cartridge set
- ❑ Time of day clock
- ❑ 12-V power supply

Additional equipment required for testing international pump configurations only:

- ❑ 600+ mL beaker or other fluid reservoir
- ❑ 600+ mL of fluid (water)

5.3.2
Setup

1. Attach 12-V power supply to the external power jack on the pump.

2. For international pump configurations only, prime the PROVIDER set with water.

   For all pump configurations, confirm that the cartridge is in the closed position for proper loading (look for the dot inside of the red circle).

   If necessary, refer to the pump's *System Operating Manual* for detailed instructions regarding priming a set and installing the cartridge.

3. Insert the PROVIDER cartridge set in the pump and assure that the latch is fully closed.

5.3.3
Test Procedure

1. If necessary, press [ON/OFF] to turn on the pump; allow the display to complete the self-test and become active.

2. If the previous program is saved in the pump memory, it may be necessary to press [YES] when CLEAR HIST & RX? appears on the screen. The display should then read:

EPIDURAL MODE YES OR NO	Press: [YES]
1 CONT 3 BOTH 2 BOLUS ONLY	Press: [1] for continuous
SELECT ML ONLY YES OR NO	Press: [YES]
SET RATE 0.0 ML/HR	Press: [2], [5] and [ENTER]
LOADING DOSE? YES OR NO	Press: [NO]

For APM:

TOTAL AMOUNT 0.0 ML	Press: [6], [0], [0] and [ENTER]

For APM II:

CONTAINER SIZE 0.0 ML	Press: [6], [0], [0] and [ENTER]
AIR SENSITIVITY 1=HI 2=LOW 3=OFF	Press: [1] and [ENTER]

The pump saves the program and the following displays alternate:

PRESS RUN/STOP TO INFUSE	PRESS RUN/STOP ON BATTERIES

3. Press and release the [ENTER] key, then immediately press and hold the [1] key. Verify that the current time and date appear on the display.

   If change from the 12-hour clock to the 24-hour clock is required, or if data shown is incorrect, press and release the [ENTER] key, then immediately press and hold the [2] key. The following display appears:

12-HOUR CLOCK? YES OR NO	Press [NO] to go to the 24-hour clock display or press [YES] to reset the 12-hour clock.

Use the arrow and numeric keys as instructed on the display to set the clock to match the current time. Press [ENTER] to accept each entry.

The display briefly shows the new setting and returns to the following alternating displays:

PRESS RUN/STOP TO INFUSE	PRESS RUN/STOP ON BATTERIES

4. Access the air alarm sensitivity screen by pressing and releasing the [ENTER] key, then immediately pressing and releasing the [7] key.

   The following message appears on the display:

LESS SENSITIVE ALARM? YES OR NO

   For domestic pump configurations only, press [NO].

   The following display appears.

TURN OFF AIR ALARM? YES or NO	Press: [YES]

   For international pump configurations only, press [YES] to accept less sensitive air-in-line sensitivity setting. The option to turn off the air alarm is not available on international configurations.

PRESS RUN/STOP TO INFUSE	Press: [RUN]

5. Immediately after pressing [RUN], verify that the pump is in the run mode (the slash mark in the upper right corner will be rotating) and that the display reads as follows:

TOTAL 0.0 ML / RATE 25.0 ML/HR

6. Allow the pump to run for 24 hours.

   Note: The ALMOST EMPTY alarm sounds approximately 1 hour before the 24-hour period elapses. If desired, the [SILENCE] key may be pressed to mute the audible alarm for 10 minutes.

7. When the delivery is complete, verify that these alternating displays appear:

TOTAL 600.0 ML RATE 25.0 ML/HR	EMPTY

5.3.4 Troubleshooting

Refer to *Table 6-2. System Error Codes* and *Table 6-3. Malfunction Codes* in *Section 6, Troubleshooting*, for troubleshooting.

5.3.5
Preparation for Use

After all testing is completed, initialize the NVRAM and clear the logs.

1. Turn on the pump.

2. To enter the software test mode, press the [ENTER] and [ON/OFF] keys simultaneously until the following display appears:

```
VERSION NUMBER
OR USE ARROWS
```

3. Using the [DOWN ARROW] key, scroll until the following display appears:

```
INITIALIZE NVRAM
OR USE ARROWS
```

4. Press [ENTER] and the following display appears as the NVRAM is reset:

```
RESETTING NVRAM
- - - - - -
```

5. Allow the pump to reset the NVRAM. When resetting is complete two beeps sound and the INITIALIZE NVRAM OR USE ARROWS display returns.

6. Press the [DOWN ARROW] key once to access the clear logs portion of the software test mode.

7. Press [ENTER] and the following display appears as the logs are cleared:

```
CLEARING LOGS
- - - - - -
```

8. Allow the pump to clear the logs. When clearing is complete two beeps sound and the CLEAR LOGS OR USE ARROWS display returns.

9. Turn off the pump. Wait at least five seconds, then turn on the pump.

10. If the pump successfully completes the self-test sequence, the pump is ready for use. Turn off the pump and remove the batteries and disconnect the 12-V power supply from the pump.

If an alarm condition occurs, refer to *Table 6-2. System Error Codes* and *Table 6-3. Malfunction Codes* in *Section 6, Troubleshooting*, for troubleshooting.

5.4
PVT Data Form

The PVT Data Form on the following pages may be reproduced and used to record the PVT test results, if desired.

APM/APM II
PVT Data Form **List No.** _____ **Serial Number** _____

Inspection

Pump Inspection

Pass _____ Fail _____ Front case
Pass _____ Fail _____ Motor frame
Pass _____ Fail _____ External jacks
Pass _____ Fail _____ Battery installation
Pass _____ Fail _____ External power supply jack
Pass _____ Fail _____ Back case

Accessories Inspection

Pass _____ Fail _____ Rechargeable battery pack
Pass _____ Fail _____ AC power adapter
Pass _____ Fail _____ Remote bolus cord and switch
Pass _____ Fail _____ Printer and printer cable
Pass _____ Fail _____ Lockbox and pole clamp

Electrical Test

Test Setup

Pass _____ Fail _____ Battery current drain on the DMM (1 mV = 1 mA) _____ (15 mA or less)

Display Check

Pass _____ Fail _____ Verify that the screen appears as indicated.

Keypad and Remote Bolus Check

Pass _____ Fail _____ Verify that the displayed value matches each key pressed.
Pass _____ Fail _____ Verify that BOLUS reads on the display when the remote bolus switch is pressed.

High-Speed Motor Test

Pass _____ Fail _____ Verify that the speed increases smoothly and that the motor is turning when the DAC value is ramped up.
With the DAC value at a maximum 255, record the following:
Pass _____ Fail _____ Supply current drain on DMM (1 mV = 1 mA) _____ (45 mA or less)
Pass _____ Fail _____ Motor RPM _____ (25.0 to 35.0)
Pass _____ Fail _____ Motor current _____ (82 or less)
Pass _____ Fail _____ Verify that the motor shuts off when watchdog disabled.
Pass _____ Fail _____ Verify that the motor turns on when watchdog enabled.
Pass _____ Fail _____ Verify that the motor shuts off when motor disabled.

Low-Speed Motor Test

With the DAC value at a 90, record the following reading:
Pass _____ Fail _____ Motor RPM _____ (1.9 to 3.5)
Pass _____ Fail _____ Verify that the AC power light is on after connecting 12-V power supply.
After disconnecting the 8-V power supply, record the following reading:
Pass _____ Fail _____ Motor RPM _____ (1.9 to 3.5)
Pass _____ Fail _____ Verify that the motor turns off when motor disabled.
Pass _____ Fail _____ Verify that the AC power light turns off when 12-V power supply is disconnected.

Optics Test

Pass _____ Fail _____ AIR reading _____ (14 to 40)

Pass _____ Fail _____ OCCL reading _____ (12 to 40)

Set Clock

Pass _____ Fail _____ Verify that the time and date are set correctly.

Printer Test

Pass _____ Fail _____ Verify that the printer completes the indicated test pattern.

Initialize NVRAM, Clear Logs, and Return to Operating Mode

Pass _____ Fail _____ Verify NVRAM initialization completed.

Pass _____ Fail _____ Verify logs cleared.

Pass _____ Fail _____ Verify that the pump completes a self-test and the display shows as indicated when the power is turned on.

Pass _____ Fail _____ Verify that the display shuts off when the [ON/OFF] key is pressed.

Pass _____ Fail _____ Supply current drain on the DMM (1 mV = 1 mA) _____ (1.5 mA or less)

Delivery Test

Wet Delivery Test

Pass _____ Fail _____ Verify clockwise rotation of the cartridge dot.

Pass _____ Fail _____ Record the volume delivered _____ (19.0 to 21.0 mL).

Dry Delivery Test

Pass _____ Fail _____ Verify clockwise rotation of the motor shaft.

Pass _____ Fail _____ Record turns counter display _____ (9.95 to 10.05 mL).

Optional Optics Test (Not required if Optics Test performed during Electrical Test)

Occlusion Test

Pass _____ Fail _____ Verify that the occlusion alarm occurs.

Air-Detection Test

Pass _____ Fail _____ Verify that the air-in-line alarm occurs.

Burn-In Test (Recommended but not required)

Test Setup

Pass _____ Fail _____ Verify that the time and date are set correctly.

Pass _____ Fail _____ After pressing [RUN], verify that the pump is in the run mode and that the display reads as indicated.

Test Results

Pass _____ Fail _____ Verify that the TOTAL and EMPTY screens alternate.

Pass _____ Fail _____ Record the amount infused _____ (600 mL)

Preparation for Use

Pass _____ Fail _____ Verify NVRAM initialization completed.

Pass _____ Fail _____ Verify logs cleared.

Pass _____ Fail _____ Verify that the pump completes the self-test sequence.

PVT Test performed by: _____ **Date:** _____

Section 6
Troubleshooting

This section contains information on audible and visual warnings and alarms, system error codes, malfunction codes, and troubleshooting.

WARNING:

Always disconnect the pump from the patient before servicing the pump.

6.1
Technical Assistance

For technical service assistance, to order replacement parts, or to return a pump for service from within the U.S.A., call:

1-800-338-7867

Send product returns from within the U.S.A. to the following location (please call the number above to receive PER registration number before shipping the pump):

Abbott AIS Technical Service
15330 Avenue of Science, Suite 100
San Diego, CA 92128

From outside the U.S.A., contact the nearest Abbott Laboratories representative for assistance.

6.2
Troubleshooting Tables

The following tables are provided to assist in troubleshooting problems with the pump. If problems require component or assembly replacement, refer to *Section 7, Replaceable Parts and Repairs*. Also refer to the PVT in *Section 5, Maintenance and Service Tests* to aid in troubleshooting the pump.

6.2.1
Alerts and Alarms

Table 6-1. Alerts and Alarms, lists the pump's possible alert and alarm conditions and suggests possible causes and corrective actions.

Table 6-1. Alerts and Alarms

Symptoms	Possible Causes	Corrective Actions
START Message alternates with stop mode screen and alarm beeps.	Pump is programmed but has not been placed in run mode.	1) Press [SILENCE] to mute audible alarm. 2) Press [RUN/STOP] to start pump.
AIR IN LINE Message flashes and alarm beeps.	Air LED/phototransistor pair has detected air in cartridge.	1) Press [SILENCE] to mute audible alarm for one minute. 2) Press [RUN/STOP] to place pump in stop mode. This clears the alarm for the **APM II**. 3) Disconnect patient from set. 4) For the **APM**, press the [PURGE] key to clear the alarm. 5) Follow the appropriate procedure to eliminate air.
CHECK CARTRIDGE Message flashes and alarm beeps.	Improperly installed cartridge. Alarm occurs while pump is in stop mode.	1) Press [SILENCE] to mute audible alarm for one minute. 2) Check that latch is fully closed. 3) Check for proper cartridge installation by removing cartridge and tubing, realigning dot in red circle of cartridge, and reinserting cartridge in pump.
OCCLUSION Message flashes and alarm beeps.	Blockage in line or improperly installed cartridge. Alarm occurs while pump is in run mode.	1) Press [SILENCE] to mute audible alarm for one minute. 2) Press [RUN/STOP] to place pump in stop mode. 3) Check that latch is fully closed. 4) Check for source of occlusion and correct problem. 5) Check for proper cartridge installation by removing cartridge and tubing, realigning dot in red circle of cartridge, and reinserting cartridge in pump.
PURGE OVERUSE Message and alarm constant.	[PURGE] key has been pressed for more than two minutes on the APM or four minutes on the APM II.	Audible alarm cannot be muted. Press [ENTER] once and [UP ARROW] twice.

Table 6-1. Alerts and Alarms

Symptoms	Possible Causes	Corrective Actions
SYSTEM ALARM Message flashes and alarm beeps.	System has detected a problem with motor circuit or cartridge.	1) Press [SILENCE] to mute audible alarm for one minute. 2) Press [RUN/STOP] to place pump in stop mode. 3) Refer to *Table 6-2. System Error Codes,* for a list of system error codes.
12:01PM INTERNAL MALFUNCTION XX Message and alarm constant.	System has detected a mechanical or computer problem.	Audible alarm cannot be muted. 1) Record malfunction number. 2) Turn pump off. 3) Remove batteries and/or disconnect AC power. 4) Refer to *Table 6-3. Malfunction Codes*, for a list of malfunction codes.
ON BATTERIES Message flashes and alarm beeps.	Pump has lost AC power and is now running on batteries.	1) Press [SILENCE] to clear audible alarm. 2) Check for secure AC connection. Restore AC power if disconnected.
LOW BATTERY Message flashes and alarm beeps.	System has detected that battery voltage is dropping.	1) Press [SILENCE] to mute audible alarm for two minutes. 2) Press [RUN/STOP] to place pump in stop mode. 3) Replace batteries or connect pump to AC power. 4) Press [RUN/STOP] to place pump in run mode.
CHANGE BATTERIES Message constant. Alarm beeps then is constant as voltage drops.	System cannot meet delivery cycle. System has detected battery voltage below allowed minimum.	Audible alarm cannot be muted. 1) Press [RUN/STOP] to place pump in stop mode. 2) Replace batteries or connect pump to AC power. 3) Press [RUN/STOP] to place pump in run mode.
x HOUR LIMIT Message flashes on lower display line.	APM: Four-hour limit has been exceeded. APM II: One or four-hour limit has been exceeded.	No action required. ***Note:*** After alarm condition has been reached, reprogramming is required to change or extend limit.

Table 6-1. Alerts and Alarms		
Symptoms	**Possible Causes**	**Corrective Actions**
ALMOST EMPTY Message flashes and alarm beeps.	Above 1 mL/hr, delivery will complete in 30 minutes or less. Below 1 mL/hr, less than 1 mL remains to be delivered.	1) Press [SILENCE] to mute audible alarm for two minutes. 2) Press [RUN/STOP] to place pump in stop mode.
EMPTY Message flashes and alarm beeps.	Pump has completed delivery.	1) Press [SILENCE] to mute audible alarm for two minutes. 2) Press [RUN/STOP] to place pump in stop mode.
CHECK PRINTER Message flashes and alarm beeps.	Pump to printer connection has been disrupted or printer button was pressed when printer was not connected.	1) Press [SILENCE] to mute audible alarm for two minutes. 2) Check printer connection.

6.2.2
System Error Codes

When the pump experiences a system error, the message SYSTEM ALARM replaces the typical display. An alarm sounds constantly, which can be muted by pressing [SILENCE].

A system error alarm may be caused by a defective cartridge, low voltage or defective batteries, a motor malfunction, or a defective PCB. Refer to *Table 6-2. System Error Codes*, for a list of system error codes and possible causes.

Many system errors can be cleared without servicing the pump, while others require repair. Before servicing the pump, follow the recovery steps recommended below. If none of these are successful, the motor or PCB may be defective.

Recovery Steps

1. Press [SILENCE] to mute the alarm and [RUN/STOP] to stop the pump and clear the alarm message.

2. Remove the cartridge and rotate the rotor forward and backward; ensure that the cartridge rotor turns freely. Place the cartridge rotor in the closed position (look for the dot inside of the red circle) and reinsert in the pump.

3. Press and release [ENTER], then press and hold the [5] key. The display shows the software version on the top line and the last four system errors on the bottom line (ERR-xxxx). If the first number to the right of ERR- is 0 (ERR-0xxx), the alarm is recovered and no further troubleshooting is necessary.

If this doesn't clear the alarm, replace the cartridge then check to see if the alarm has been cleared.

If this doesn't clear the alarm, turn off the pump and replace **both** batteries with fresh Duracell 9-V batteries. Turn the pump on again, answer [NO] to the CLEAR HIST & Rx? YES OR NO screen, then check to see if the alarm has been cleared.

4. If the alarm is cleared, press [RUN/STOP] to place the pump in the run mode.

   If the alarm is not cleared, replace the motor assembly, PCB assembly, or other component as needed, and perform the PVT before returning the pump to use (refer to *Section 5.2, Performance Verification Test*).

Table 6-2. System Error Codes

System Error Codes and Symptoms		Possible Causes
01	Motor speed off by more than 50%.	Defective motor, motor current or voltage monitoring circuit, motor tachometer, or tachometer interface circuit.
02	No encoder counts (tach tics) when running.	Defective motor, motor drive circuit, motor tachometer, or tachometer circuit.
03	Motor still on at next TO_FAST cycle and motor current above 100 mA.	Defective (high torque) cartridge. Defective motor or motor drive circuit.
04	Motor still on at next GO_SLO cycle.	Defective (high torque) cartridge. Defective motor or motor drive circuit.
05	Excessive motor current (MOTI) while running (>100 mA).	Defective (high torque) cartridge. Defective motor, motor current amplifier U34B, or associated components.
06	No encoder counts (tach tics) while purging.	Defective motor, motor drive circuit, motor tachometer, or tachometer circuit.
07	Excessive motor current (MOTI) while purging (>100 mA).	Defective (high torque) cartridge. Defective motor, motor current amplifier U34B, or associated components.
08	Motor speed voltage or current error.	Defective motor, encoder, or tachometer circuit. Incorrect motor current or voltage readings.
09	Motor speed calculations not done in 10 seconds.	Defective microprocessor (U2).
10	APM II Only: Overuse of purge.	Purge was exceeded by four minutes or keypad is defective.

6.2.3
Malfunction Codes

When the pump experiences an internal malfunction, the message INTERNAL MALFUNCTION with the time of occurrence and the code number replaces the typical display. An alarm sounds constantly and cannot be muted.

Many malfunction codes can be cleared without servicing the pump, while others require repair. Malfunction code 01 is not recoverable. Before servicing the pump, follow the recovery steps recommended below. Refer to *Table 6-3. Malfunction Codes*, for a complete list of malfunction codes and possible causes.

Recovery Steps

To avoid unnecessary repairs, try these steps before servicing the pump:

1. Press [ON/OFF] to turn off the pump and disconnect AC power and remove batteries.

2. Wait at least five seconds, then reconnect the power source(s) and press [ON/OFF] to turn on the pump.

   For NVRAM checksum errors <u>only</u>, reinitialize NVRAM as follows:
   (APM codes 8, 9, 10, 15 and APM II codes 8, 9, 10, 11):

   During self-test simultaneously press and hold the [ENTER] and [ON/OFF] keys to enter the software test mode. Release the keys when the VERSION NUMBER | OR USE ARROWS display appears. Using the [DOWN ARROW] key, scroll until the INITIALIZE NVRAM | OR USE ARROWS display appears. Press [ENTER] to begin NVRAM initialization. When resetting is complete two beeps sound and the INITIALIZE NVRAM OR USE ARROWS display returns.

   For APM II code 19 <u>only</u>:

   Verify that an Abbott approved power supply is in use. Allow one minute to elapse before reconnecting power supply to allow the fuse to reset.

3. If the pump completes the self-test sequence, the alarm is cleared. Verify the program via the history function before using the pump on a patient.

   If APM code 16 or APM II code 15 is recovered, reset the shift and reprogram the pump.

   If an alarm is not recovered (i.e., the self-test does not complete and the malfunction code display returns), replace the PCB assembly, or other component as needed, and perform the PVT before returning the pump to use (refer to *Section 5.2, Performance Verification Test*).

Table 6-3. Malfunction Codes

Malfunction Codes and Symptoms		Possible Causes
01	ROM checksum error	Defective EPROM U4

Table 6-3. Malfunction Codes

	Malfunction Codes and Symptoms	Possible Causes
02	RAM integrity error	Defective microprocessor U2.
03	Stack overflow.	Defective microprocessor U2.
04	Keypad active when batteries installed.	Defective keypad or keypad interface.
05	Motor runaway at power-up test.	Defective motor drive circuit or microprocessor port line PA6.
06	ROM check did not complete.	Defective microprocessor U2 or EPROM U4.
07	RAM check did not complete.	Defective microprocessor U2.
08	NVRAM checksum error in program.	Defective microprocessor U2.
09	NVRAM checksum error run-time parameters.	Defective microprocessor U2.
10	NVRAM checksum error - p_flg.	Defective microprocessor U2.
11	APM: Overuse of purge.	Purge was exceeded by two minutes or keypad is defective.
	APM II: NVRAM checksum error - history.	Defective U19.
12	Motor runaway.	Defective motor drive circuit or tachometer circuit.
13	Voltage present on motor when it should be off.	Defective motor drive circuit or A/D input on input monitoring motor voltage.
14	External NVRAM does not acknowledge message.	Defective U19.
15	APM: NVRAM checksum error - history.	Defective U19.
	APM II: Error writing to internal NVRAM.	Defective microprocessor U2.
16	APM: Error writing to internal NVRAM	Defective microprocessor U2.
	APM II: Clock chip error - getting ahead of rti.	Defective clock chip U5 or U2.
17	APM II Only: Clock chip error - falling behind rti.	Defective clock chip U5 or U2.
18	APM II Only: External interface voltage level error	Defective A/D port lines PE5 or PE5 to J11, pin 6 circuitry.
19	APM II Only: Power supply voltage is too high.	Incorrect power supply used or defective power circuitry or microprocessor A/D port PE6.

6.2.4
Troubleshooting Problems and Solutions

Table 6-4. Troubleshooting, lists a selection of possible functional problems that may occur with the pump. The solutions are offered in order of magnitude of the repair required. Attempt all noninvasive solutions before repairing the pump.

Table 6-4. Troubleshooting

Symptoms	Possible Causes	Corrective Actions
No pump display upon installing batteries.	a) Batteries may be dead or not fully charged.	a) Check batteries with voltmeter to assure 9-V charge in both batteries.
Display scrambled and beeper pattern is not normal.	b) PCB assembly may be defective.	b) Replace PCB assembly if necessary.
No display or scrambled display on power-up, but beeper pattern appears normal.	a) LCD may be defective.	a) Replace LCD if necessary.
	b) LCD connector on PCB may be defective.	b) Replace PCB assembly if necessary.
One or more keys on keypad inoperative.	a) Keypad may be locked.	a) Unlock keypad.
Typical keypad failure causes one entire row or column to be inoperative.	b) Keypad may be faulty.	b) Replace keypad if necessary.
Beeper inoperative, but display appears normal.	Beeper may be defective.	Replace beeper if necessary.
Motor won't turn or turns at incorrect speed.	a) Motor may be defective.	a) Replace motor assembly if necessary.
	b) PCB assembly may be defective.	b) Replace PCB assembly if necessary.
Timer does not keep time.	If time is lost when batteries are removed, check BT1.	Replace lithium battery if voltage is less than 2.85 V. Replace PCB assembly if necessary.
Tachometer produces incorrect RPM or no pulses.	a) Connections from board to motor may be defective.	a) Repair connections if necessary.
	b) Tachometer in motor may be defective or output level may have shifted.	b) Check tach output from motor, verify that amplitude swings less than 2.5 V to greater than 4.2 V. Replace motor if necessary.

Table 6-4. Troubleshooting

Symptoms	Possible Causes	Corrective Actions
Short battery life.	a) Verify battery voltage is 9 V using a voltmeter.	a) Replace both batteries if necessary.
	b) Check brand name of battery in use.	b) Use Duracell 9-V batteries.
	c) Motor drive circuit may be defective, or motor may be defective.	c) Test motor as directed in PVT in *Section 5, Maintenance and Service Tests*. Measure supply current and motor current drains to isolate problem.
	d) PCB assembly may be defective.	d) Measure ON current drain (motor off) and OFF current drain. If not within range, replace PCB assembly.
OCCLUSION or CHECK CARTRIDGE display does not appear when occlusion is present.	Occlusion phototransistor or wiring may be defective.	Replace optics assembly. Replace PCB assembly if necessary.
OCCLUSION alarm or CHECK CARTRIDGE alarm stays on.	a) Cartridge may not be fully installed.	a) Check to assure cartridge is firmly seated in motor frame and that latch is fully closed and flush with back case.
	b) No cartridge installed or cartridge may be faulty.	b) Install new cartridge.
	c) Optics may be dirty.	c) Clean optics surfaces as directed in *Section 5, Maintenance and Service Tests*. Replace optics assembly if necessary.
	d) Latch may be loose.	d) Check for loose screws on latch assembly. Replace latch assembly if necessary.
	e) Optics LED or phototransistor may be faulty.	e) Replace optics assembly. Replace PCB assembly if necessary.

Table 6-4. Troubleshooting

Symptoms	Possible Causes	Corrective Actions
AIR-IN-LINE alarm does not come on when air is present in sensing chamber of tubing.	a) Air sensitivity alarm may be disarmed (applies to domestic pump configuration only).	a) Place pump in stopped mode and check air sensitivity setting. Revise if necessary. (Refer to *System Operating Manual* for instructions.)
	b) Optics surfaces may be dirty.	b) Clean optics surfaces as directed in *Section 5, Maintenance and Service Tests.*
	c) Cartridge may not fit properly into motor frame assembly or may not be completely latched.	c) Correct fit. Replace cartridge if necessary. Replace latch assembly if necessary.
	d) Optics wiring may be defective.	d) Check and repair wiring if necessary.
	e) Air LED or phototransistor may be defective.	e) Replace optics assembly. Replace PCB assembly if necessary.
AIR-IN-LINE alarm stays on even when air is not present in sensing chamber of cartridge.	a) [PURGE] key may not have been pressed to clear alarm.	a) Press [PURGE]. (Refer to the *System Operating Manual* for instructions.)
	b) Optics wiring may be defective.	b) Check and repair wiring if necessary.
	c) Air LED or phototransistor may be defective.	c) Replace optics assembly. Replace PCB assembly if necessary.

Section 7
Replaceable Parts and Repairs

Replaceable Parts and Repairs details removal and replacement procedures for APM and APM II parts and a list of equipment and materials required to perform the procedures.

7.1
Replaceable Parts

Replaceable parts for the infusion system are itemized in the spare parts price list. To request a copy of the current spare parts price list, contact Abbott Laboratories (see *Section 6.1, Technical Assistance*). For convenient reference, insert a copy of the spare parts price list here.

7.2
Replacement Procedures

This section contains safety and equipment precautions, required tools and materials, and step-by-step procedures for replacing parts in the infusion system. Unless otherwise stated, always perform the PVT after a replacement procedure.

7.2.1
Safety and Equipment Precautions

Before opening the front enclosure of the infusion system, take all necessary precautions for working on high-voltage equipment.

WARNING:

Unless otherwise indicated, disconnect the infusion system from AC power before performing any replacement procedure.

WARNING:

Possible explosion hazard if product is serviced or repaired in the presence of flammable anesthetics.

CAUTION: Use proper ESD grounding techniques when handling components. Wear an antistatic wrist strap and use an ESD-protected workstation. Store the PWA in an antistatic bag before placing it on any surface.

7.2.2
Required Tools and Materials

The following tools and materials, or equivalents, are required to perform the replacement procedures in this section. In addition, at the beginning of each procedure is a list of tools and materials required for that specific procedure.

- ❑ 5/64-inch Allen wrench
- ❑ Phillips screwdriver
- ❑ Blade-type screwdriver

7.3
Pump Disassembly Procedure

Disassembly progresses from the back case to the front case. Disassemble the pump only to the point required for repair.

7.3.1
Back Case

1. Lay the pump face down on a soft surface with the base facing the technician. Remove the battery housing door.

2. Peel the void label off of the screw on the upper-left corner of the back case and loosen and remove all four back case screws.

3. Lift the back case and remove the battery pin P1 from PCB connector J1 (refer to *Figure 7-1. PCB Connections*).

4. Remove the back case from the pump.

5. Refer to *Section 7.5, Back Case Assembly*, for further repair instructions as required.

7.3.2
Motor Frame

1. Remove the screw holding the proximal end of the motor frame to the front case.

2. Remove the motor pin P3 and the optics pin P5 from the PCB connections J3 and J5 (refer to *Figure 7-1. PCB Connections*).

3. Lift the motor frame up and out from the front case.

4. Refer to *Section 7.6, Optics Assembly*; *Section 7.7, Motor Assembly*; and *Section 7.8, Latch Assembly*, for further repair instructions as required.

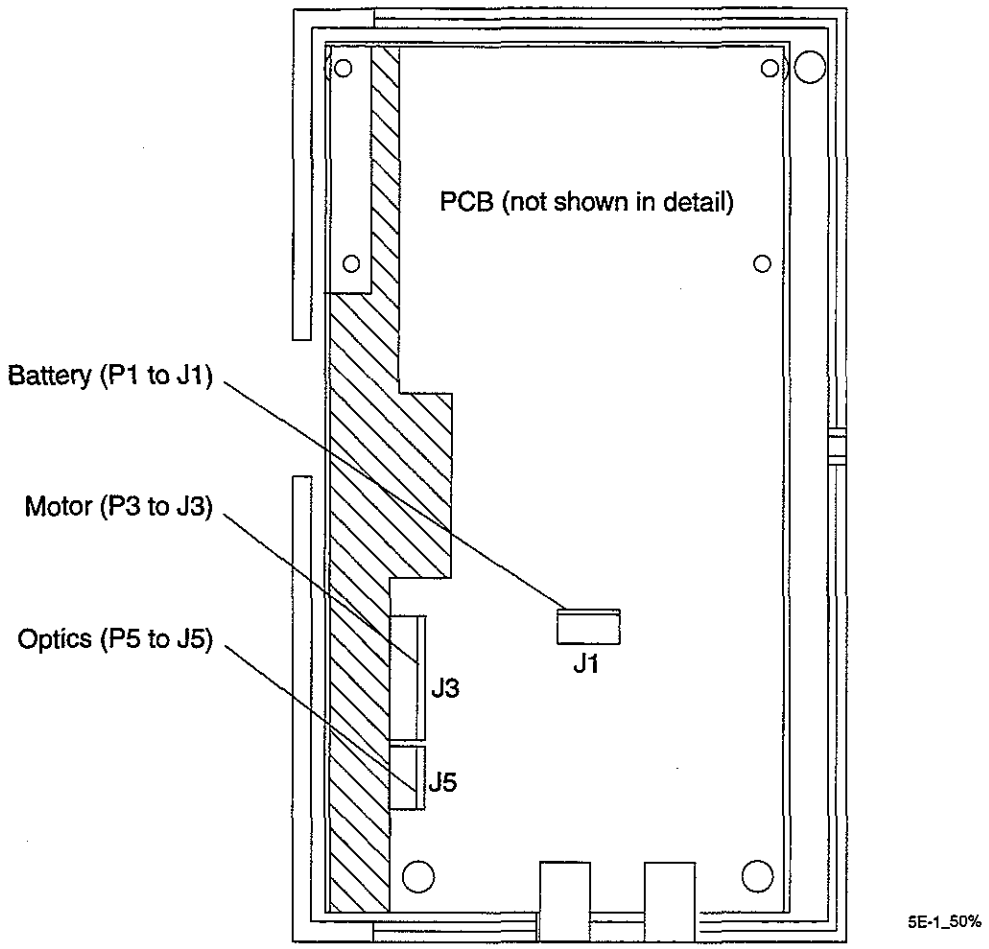

Figure 7-1. PCB Connections

7.3.3
PCB

1. Remove the three screws holding the board to the front case.
2. Gently lift the PCB from the front case.
3. Disconnect the keypad ribbon cable from the front side of the PCB.
4. Refer to *Section 7.9, PCB Assembly*, for further repair instructions as required.

7.3.4
Front Case

1. After separating all other assemblies from the front case, set the front case assembly aside.
2. Refer to *Section 7.10, Front Case Assembly*, for further repair instructions as required.

7.4 Pump Reassembly Procedure

CAUTION: Any repair or replacement must be followed by the performance verification test (PVT) and burn-in test described in Section 5.

After the necessary repairs have been made, reassemble the pump as follows (refer to *Figure 7-2. Pump Reassembly Diagram*).

7.4.1 Hardware Available

The following hardware may be ordered for replacement:

- ❑ 10-24 x $^{5}/_{16}$-inch flat-head screw
- ❑ 2-56 x $^{7}/_{8}$-inch flat-head screw
- ❑ 4-40 x $1^{1}/_{2}$-inch flat-head screw
- ❑ 2-56 x $^{1}/_{2}$-inch pan-head screw
- ❑ 2-56 x $^{11}/_{16}$-inch socket-head screw

7.4.2 Front Case and PCB

1. Attach the keypad ribbon cable from the assembled front case to the mating header on the front side of the PCB.

2. Assure that all pins are connected and that the keypad ribbon cable is not twisted.

3. Carefully lay the PCB into the front case. Assure that the keypad ribbon cable is not crimped or exposed.

4. Attach the PCB to the front case using three 2-56 x $^{1}/_{2}$-inch pan-head screws. Tighten screws.

7.4.3 Motor Frame

1. Place the motor frame (with optics, latch, and motor assemblies in place) into the front case and PCB assembly.

2. Attach the motor pin P3 to connector J3 on the PCB.

3. Attach the optics pin P5 to connector J5 on the PCB.

4. Attach the motor frame to the front case by inserting the 2-56 x $^{11}/_{16}$-inch socket-head screw through the hole in the proximal end of the motor frame. Tighten the screw.

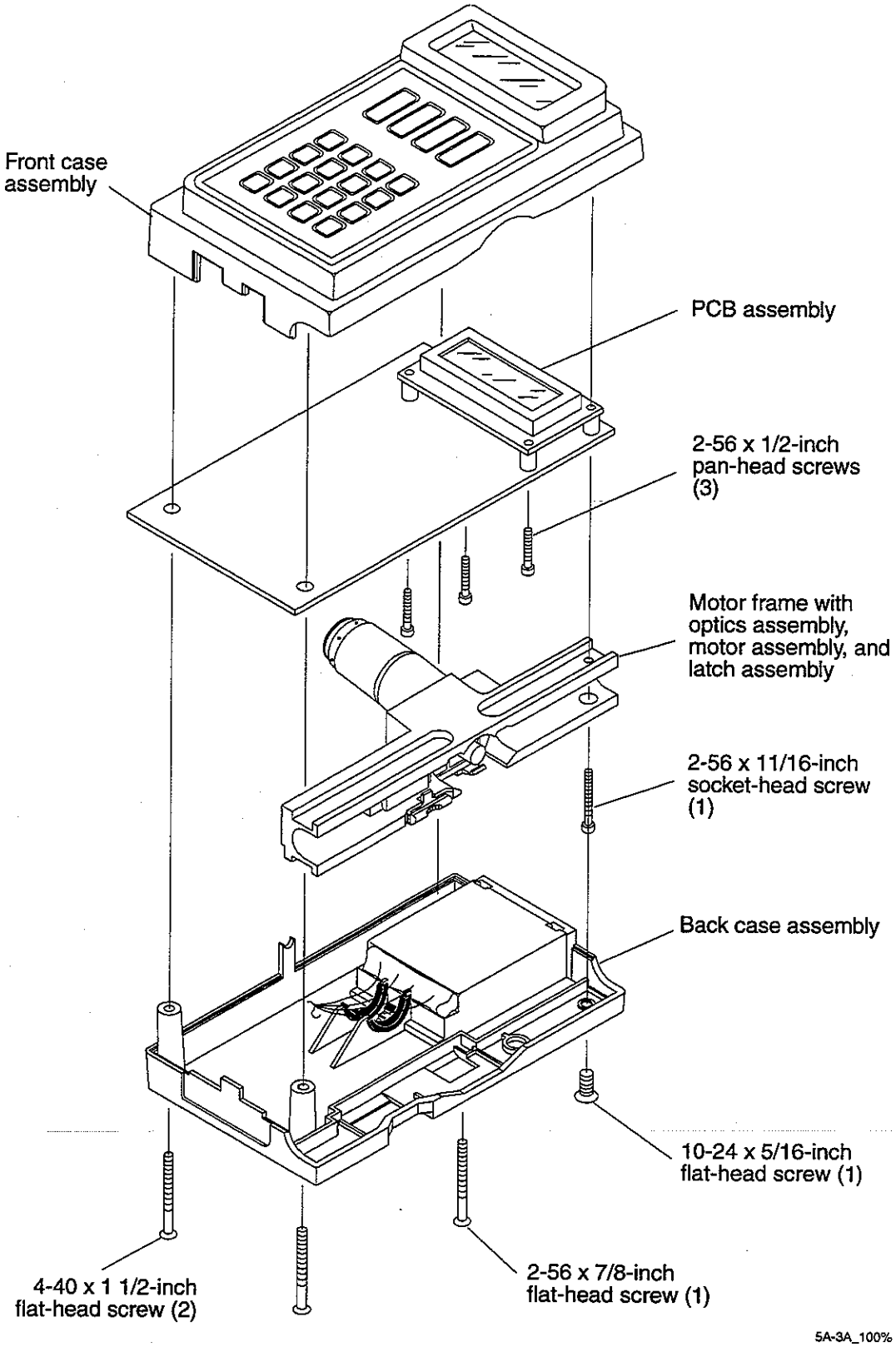

Figure 7-2. Pump Reassembly Diagram

7.4.4
Back Case

1. Check that none of the wires cover the mounting holes, then attach the back case battery pin P1 to connector J1 on the PCB.

2. Carefully guide the back case over the motor frame and onto the front case.

3. Attach the back case to the front case using two 4-40 x $1^1/_2$-inch flat-head screws at the bottom, one 2-56 x $^7/_8$-inch flat-head screw at the top right, and one 10-24 x $^5/_{16}$-inch flat-head screw at the top left. Tighten all screws.

7.5
Back Case Assembly

Replace the back case assembly as required. The back case is sold with the battery contacts and wiring fully assembled, the bolus label, connector ID label and the operating instructions label in place, and a battery door attached (refer to *Figure 7-3. Back Case Labeling* and *Figure 7-4. Back Case Assembly*).

Note regarding domestic configurations: Infusion pumps are critical devices and are therefore serialized for customer safety per FDA Good Manufacturing Practices and Abbott Guidelines. The serial number is crucial for tracking the manufacture, sale, and maintenance of each device and must not be altered for any reason at any time.

To assure serial number and final assembly number integrity, these numbers must be placed on the back case assembly per order by Abbott Technical Service.

Note: Abbott Technical Service places the configuration letter label on the pump. This number does not change when the pump is owner-serviced.

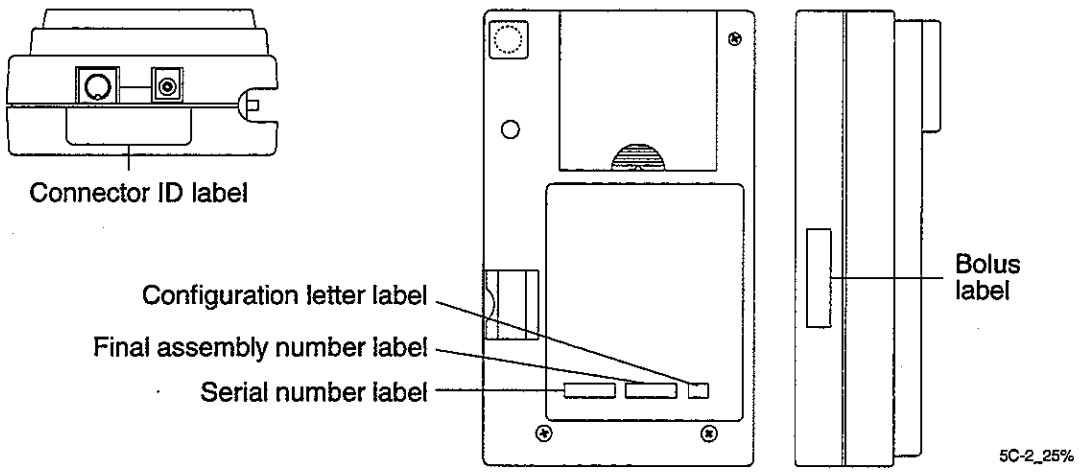

Figure 7-3. Back Case Labeling

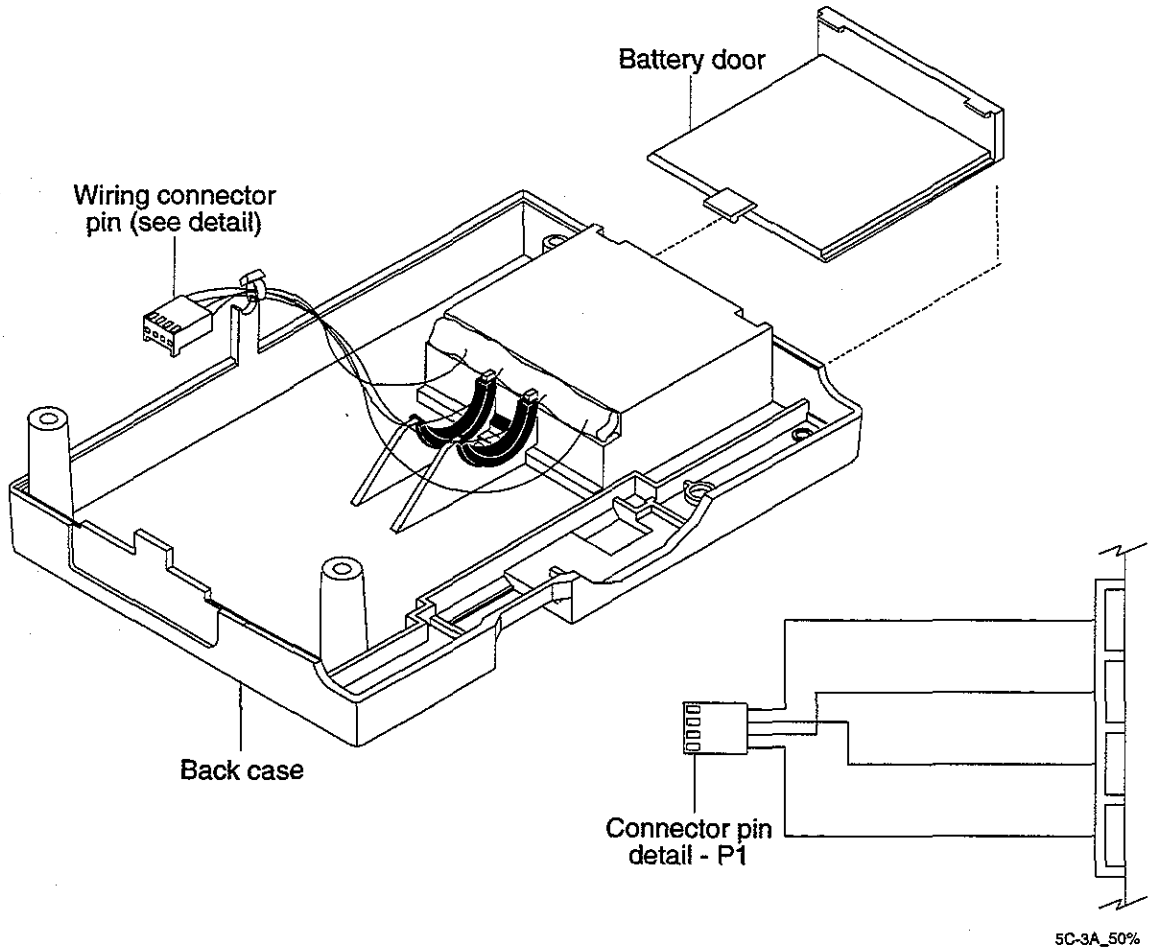

Figure 7-4. Back Case Assembly

7.5.1 Component Available

The battery door may be replaced separately as needed.

7.5.2 Repair Procedure

For domestic configurations of the APM and APM II, adhere to the following procedure when replacing a back case assembly:

1. Using a **copy** of the APM or APM II Back Case Assembly Order Form provided in the Replacement Parts List, record the serial number, final assembly number, and configuration letter of the pump. Sign and date the form, then fax or mail the form with the order to Abbott.

2. When receiving a replacement back case assembly, assure that the serial number is matched to the correct pump being serviced. If the serial number does not match, contact Abbott Technical Service.

Complete the reassembly as directed in *Section 7.4, Pump Reassembly Procedure*, then complete the PVT and burn-in test as described in *Section 5, Maintenance and Service Tests*.